SAVAGE®

2025 CATALOG

INTERNATIONAL

2025

CRACKING THE CODE

THE MEANING BEHIND THE MARKS.

RIFLE NAMING CONVENTION

CODE	KEY
B	WOOD-LAMINATE STOCK
BT	WOOD-LAMINATE THUMBHOLE STOCK
G	HARDWOOD STOCK
F	SYNTHETIC STOCK
RJ	ROYAL JACARANDA STOCK
EV	EVOLUTION STOCK
L	LEFT HAND
NS	NO SIGHTS
S / SS	STAINLESS STEEL
SR	SUPPRESSOR READY (THREADED)
T	PEEP SIGHTS (RIMFIRE)
TR	TACTICAL-STYLE RIMFIRE
TRR	TACTICAL-STYLE RIMFIRE W/ RAIL
V	HEAVY BARREL
XP	SCOPED RIFLE PACKAGE
Y	COMPACT

STANDARD TWIST RATE PER CALIBER

CALIBER	TWIST RATE
17 HM2	9"
17 HMR	9"
17 WSM	8"
17 HORNET	9"
204 RUGER	12"
21 SHARP	10"
22 WMR	16"
22 S/L/LR	16"
22 HORNET	14"
22 NOSLER	7"
222 REM	14"
223 REM	7" / 9" / 12"
223 REM / 5.56MM	8" / 7"
22-250 REM	9" / 12"
243 WIN	9.25"
6MM ARC	7.5"-5R
6MM CREEDMOOR	7.5"
25-06 SPFLD	10"
260 REM	8"
6.5 CREEDMOOR	8"
6.5 X 284 NORMA	8"
45 AUTO	16"
9MM LUGER	10"

CALIBER	TWIST RATE
6MM NORMA BR	8" / 12"
6.5 PRC	8"
270 WSM	10"
270 WIN	10"
280 ACKLEY IMP	9"
28 NOSLER	8.44" / 9"
7MM-08 REM	9.5"
7MM REM MAG	9.5"
7MM PRC	8"
300 BLACKOUT	8"
308 WIN	10" / 13"
30-06 SPRG	10"
300 WSM	10"
300 WIN MAG	9.3" / 10"
7.62 X 39 MM	10"
300 PRC	8.5"
338 WIN MAG	10"
338 LAPUA	9" / 9.3"
375 RUGER	12"
350 LEGEND	16"
400 LEGEND	16"
450 BUSHMASTER	24"
12GA RIFLED	35"
20GA RIFLED	24"

Facebook: @savagearms

Instagram: @savagearms

X: @savagearms

YouTube: @savageaccuracy

CAN'T FIND WHAT YOU'RE LOOKING FOR? CONTACT OUR **SPECIAL ORDER SHOP**:

1-800-370-0708, OPT: 6

CORPORATE: **413-568-7001** // 100 Springdale Road, Westfield, MA 01085

SALES: **844-486-1441** // 118 Mountain Road, Suffield, CT 06078

TECHNICAL SERVICE: **800-370-0708**

SAVAGE®

SPECIFICATIONS SUBJECT TO CHANGE WITHOUT NOTICE.

MODEL LINEUP

REVEL 2
SAVAGE 1911 4
STANCE XR 10
110 PCS 14
IMPULSE 16
MODEL 110 24
MODEL 110 TROPHY 40
SLUG GUNS/HUNTER 48

AXIS 2 52
AXIS XP 64
MODEL 334 68
LONG RANGE 72
VARMINT 78
A SERIES 84
MODEL 64 90
B SERIES 96

MARK II 102
93/93R17 110
B.MAG 118
SINGLE SHOT RIMFIRE 122
RENEGAUGE 128
560 SEMI-AUTO 134
555 BREAK-ACTION 136
SINGLE SHOT 140

PUMP ACTION 144
MODEL 42 150
ACCESSORIES 152

SAVAGE®

2025

REVEL

Introducing Savage REVEL: a sleek, modern take on the classic lever action rimfire rifle. Crafted with precision engineering and advanced materials, this rifle embodies a fusion of tradition and innovation. Its streamlined design features a beautiful contoured walnut stock. The lever action mechanism delivers smooth and reliable cycling, while the crisp trigger ensures precise shot placement. Simple, toolless take-down makes this your new go to backpack rifle. Equipped with a tubular magazine, REVEL offers ample firepower for plinking or small game hunting. With its timeless aesthetics and cutting-edge performance, this rifle sets a new standard in rimfire firearms.

- Simple push-pin takedown for easy transport and cleaning
- Smooth lever action
- Crossbolt safety
- Beautiful satin finish walnut stock
- Pistol grip walnut stock w/ stippling *(DLX)*
- Rubber butt pad *(DLX)*
- Oversize lever loop for fast easy operation
- Drilled and tapped receiver
- Adjustable iron sights
- Medium profile carbon steel barrel
- DLX models feature a 1/2-28 threaded barrel

SAVAGE®

SPECIFICATIONS SUBJECT TO CHANGE WITHOUT NOTICE.

REVEL

3 CALIBERS // **2** MODELS

17 HMR · 22 LR · 22 WMR

NEW//// REVEL CLASSIC

PART #	ACTION	CALIBER	ROUND CPTY	STOCK	STOCK COLOR	BARREL	BARREL LENGTH IN / CM		TWIST RATE	OVERALL LENGTH IN / CM		WEIGHT LB / KG	
46000	LEVER	22 LR	12	WALNUT	BROWN	CARBON STEEL	18	45,7	16	36.5	92,7	6.1	2,8
46100	LEVER	22 WMR	9	WALNUT	BROWN	CARBON STEEL	18	45,7	16	36.5	92,7	6.1	2,8
46200	LEVER	17 HMR	9	WALNUT	BROWN	CARBON STEEL	18	45,7	9	36.5	92,7	6.1	2,8

NEW//// REVEL DLX

PART #	ACTION	CALIBER	ROUND CPTY	STOCK	STOCK COLOR	BARREL	BARREL LENGTH IN / CM		TWIST RATE	OVERALL LENGTH IN / CM		WEIGHT LB / KG	
46020	LEVER	22 LR	12	WALNUT	BROWN	CARBON STEEL	18	45,7	16	36.5	92,7	6.1	2,8
46120	LEVER	22 WMR	9	WALNUT	BROWN	CARBON STEEL	18	45,7	16	36.5	92,7	6.1	2,8
46220	LEVER	17 HMR	9	WALNUT	BROWN	CARBON STEEL	18	45,7	9	36.5	92,7	6.1	2,8

2025

SAVAGE 1911

After more than a century of evolution, John Moses Browning's venerable single-action semi-auto is still standing strong. The gun that beat the Savage Model 1907 to become the US Military's M1911 is now being given the Savage treatment. The Savage 1911 is built from stainless steel and has a machined sear and disconnector. While the look pays homage to the original, the Savage 1911 is built to work. From its nitride coated titanium firing pin, to the target crown on the barrel, this 1911 delivers accuracy and reliability. **This is Savage.**

- Forged stainless steel frame and slide
- 5" stainless steel barrel machined from billet with 11° target crown
- Dual recoil spring (45 Auto Models) system with GI-style guide rod and barrel bushing
- Ejection port is lowered, flared, and cut for live round ejection
- Nitride-coated titanium firing pin
- Fully machined, tool steel sear and disconnector and stainless-steel hammer
- Novak® Sights
- Ambidextrous safety Lock
- VZ G10 Grips
- Includes (2) magazines and handgun case for protection
- Optional picatinny rail on certain models
- Original 1911 style firing system

SAVAGE®

SPECIFICATIONS SUBJECT TO CHANGE WITHOUT NOTICE.

SAVAGE 1911

2 CALIBERS // **12** MODELS

45 AUTO — 9MM LUGER

SAVAGE 1911

SAVAGE 1911 GOVT STYLE BLACK NITRIDE

PART #	ACTION	CALIBER	ROUND CPTY	BARREL LENGTH IN / CM		TWIST RATE	OVERALL LENGTH IN / CM		WEIGHT LB / KG		SLIDE FINISH	FRAME FINISH	GRIP COLOR	SIGHTS
65010	SEMI AUTO	45 AUTO	8+1	5	12,7	16	8.5	21,5	2.4	1,1	BLACK NITRIDE	BLACK NITRIDE	BLACK/GRAY	NOVAK LOMOUNT ADJUSTABLE REAR, WHITE DOT FRONT
65214	SEMI AUTO	9MM LUGER	10+1	5	12,7	10	8.5	21,5	2.4	1,1	BLACK NITRIDE	BLACK NITRIDE	BLACK/GRAY	NOVAK LOMOUNT ADJUSTABLE REAR, WHITE DOT FRONT

SAVAGE 1911 GOVT STYLE TWO-TONE

PART #	ACTION	CALIBER	ROUND CPTY	BARREL LENGTH IN / CM		TWIST RATE	OVERALL LENGTH IN / CM		WEIGHT LB / KG		SLIDE FINISH	FRAME FINISH	GRIP COLOR	SIGHTS
65011	SEMI AUTO	45 AUTO	8+1	5	12,7	16	8.5	21,5	2.4	1,1	BLACK NITRIDE	BLACK NITRIDE	BLACK/GRAY	NOVAK LO-MOUNT ADJUSTABLE TRITIUM, MEGA DOT YELLOW TRITIUM FRONT
65016	SEMI AUTO	9MM LUGER	10+1	5	12,7	10	8.5	21,5	2.4	1,1	BLACK NITRIDE	BLACK NITRIDE	BLACK/GRAY	NOVAK LO-MOUNT ADJUSTABLE TRITIUM, MEGA DOT YELLOW TRITIUM FRONT

SPECIFICATIONS SUBJECT TO CHANGE WITHOUT NOTICE.

SAVAGE 1911 GOVT STYLE STAINLESS

PART #	ACTION	CALIBER	ROUND CPTY	BARREL LENGTH IN / CM		TWIST RATE	OVERALL LENGTH IN / CM		WEIGHT LB / KG		SLIDE FINISH	FRAME FINISH	GRIP COLOR	SIGHTS
65012	SEMI AUTO	45 AUTO	8+1	5	12,7	16	8.5	21,5	2.4	1,1	STAINLESS	STAINLESS	HYENA BROWN	NOVAK LOMOUNT ADJUSTABLE REAR, WHITE DOT FRONT
65025	SEMI AUTO	9MM LUGER	10+1	5	12,7	10	8.5	21,5	2.4	1,1	STAINLESS	STAINLESS	HYENA BROWN	NOVAK LOMOUNT ADJUSTABLE REAR, WHITE DOT FRONT

SAVAGE 1911 GOVT STYLE STAINLESS WITH RAIL

PART #	ACTION	CALIBER	ROUND CPTY	BARREL LENGTH IN / CM		TWIST RATE	OVERALL LENGTH IN / CM		WEIGHT LB / KG		SLIDE FINISH	FRAME FINISH	GRIP COLOR	SIGHTS
65013	SEMI AUTO	45 AUTO	8+1	5	12,7	16	8.5	21,5	2.4	1,1	STAINLESS	STAINLESS	HYENA BROWN	NOVAK LO-MOUNT ADJUSTABLE TRITIUM, MEGA DOT YELLOW TRITIUM FRONT
65019	SEMI AUTO	9MM LUGER	10+1	5	12,7	10	8.5	21,5	2.4	1,1	STAINLESS	STAINLESS	HYENA BROWN	NOVAK LO-MOUNT ADJUSTABLE TRITIUM, MEGA DOT YELLOW TRITIUM FRONT

SAVAGE 1911 GOVT STYLE TWO-TONE WITH RAIL

PART #	ACTION	CALIBER	ROUND CPTY	BARREL LENGTH IN / CM		TWIST RATE	OVERALL LENGTH IN / CM		WEIGHT LB / KG		SLIDE FINISH	FRAME FINISH	GRIP COLOR	SIGHTS
65018	SEMI AUTO	45 AUTO	8+1	5	12,7	16	8.5	21,5	2.4	1,1	BLACK NITRIDE	STAINLESS	BLACK/GRAY	NOVAK LO-MOUNT ADJUSTABLE TRITIUM, MEGA DOT YELLOW TRITIUM FRONT
65018	SEMI AUTO	9MM LUGER	10+1	5	12,7	10	8.5	21,5	2.4	1,1	BLACK NITRIDE	STAINLESS	BLACK/GRAY	NOVAK LO-MOUNT ADJUSTABLE TRITIUM, MEGA DOT YELLOW TRITIUM FRONT

SAVAGE 1911 GOVT STYLE BLACK NITRIDE WITH RAIL

PART #	ACTION	CALIBER	ROUND CPTY	BARREL LENGTH IN / CM		TWIST RATE	OVERALL LENGTH IN / CM		WEIGHT LB / KG		SLIDE FINISH	FRAME FINISH	GRIP COLOR	SIGHTS
65020	SEMI AUTO	45 AUTO	8+1	5	12,7	16	8.5	21,5	2.4	1,1	BLACK NITRIDE	BLACK NITRIDE	BLACK/GRAY	NOVAK LO-MOUNT ADJUSTABLE TRITIUM, MEGA DOT YELLOW TRITIUM FRONT
65021	SEMI AUTO	9MM LUGER	10+1	5	12,7	10	8.5	21,5	2.4	1,1	BLACK NITRIDE	BLACK NITRIDE	BLACK/GRAY	NOVAK LO-MOUNT ADJUSTABLE TRITIUM, MEGA DOT YELLOW TRITIUM FRONT

NOTES

2025

STANCE XR

The STANCE XR refines the micro-nine into a thin, easily concealable pistol that is built to be both functional in the hand as it is easy to conceal. With its aggressive surface textures, advanced slide serrations and ergonomic grip, Stance XR is designed to be comfortable when holstered and formidable when it needs to be. There's a new option for everyday carry. Stance XR is Savage.

- Includes (2) 18° interchangeable backstraps to adjust grip size
- Ambidextrous magazine release & slide catch
- Stippling grip texture for 360° secure fit with finger indexing
- Steel slide with beveled front for easy holstering
- Wide slide serrations for increased purchase
- Short, crisp trigger with short reset and wide, well-rounded face
- 3.2" stainless steel barrel
- Removable chassis for interchangeable grips
- Easy takedown
- Snag free functional sights
- Includes (2) magazines and handgun case for protection
- 10 & 13 round magazines
- Savage QRO System *(Quick Release Optic System)*
- Available with a factory mounted red dot sight

SAVAGE®

SPECIFICATIONS SUBJECT TO CHANGE WITHOUT NOTICE.

STANCE XR

1 CALIBER // **28** MODELS

9MM LUGER

XS
NIGHT SIGHTS
(select models)

BEVELED
SLIDE

CRIMSON TRACE CTS1500 RED DOT *(XP Models only)*

INTERCHANGEABLE
BACKSTRAPS

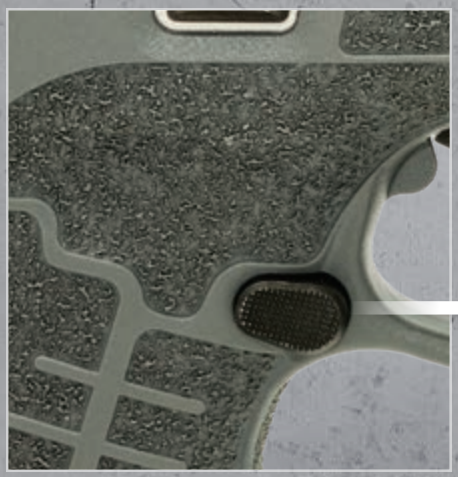

AMBIDEXTROUS
MAG RELEASE

2025

STANCE XR

NEW//// STANCE XR BLACK

PART #	ACTION	CALIBER	ROUND CPTY	BARREL LENGTH IN / CM		TWIST RATE	OVERALL LENGTH IN / CM		WEIGHT LB / KG		SAFETY	SLIDE COLOR	GRIP COLOR	SIGHTS
67052	SEMI AUTO	9MM LUGER	10+1 & 13+1	3.2	8,1	10	6.2	15,8	1.3	,6	FIXED	BLACK	BLACK	DOT SIGHTS
67053	SEMI AUTO	9MM LUGER	10+1 & 13+1	3.2	8,1	10	6.2	15,8	1.3	,6	FIXED	BLACK	BLACK	NIGHT SIGHTS
67054	SEMI AUTO	9MM LUGER	10+1 & 13+1	3.2	8,1	10	6.2	15,8	1.3	,6	FIXED	BLACK	BLACK	RED DOT
67062	SEMI AUTO	9MM LUGER	10+1 & 13+1	3.2	8,1	10	6.2	15,8	1.3	,6	FIXED	BLACK	BLACK	DOT SIGHTS
67063	SEMI AUTO	9MM LUGER	10+1 & 13+1	3.2	8,1	10	6.2	15,8	1.3	,6	FIXED	BLACK	BLACK	NIGHT SIGHTS

NEW//// STANCE XR FDE

PART #	ACTION	CALIBER	ROUND CPTY	BARREL LENGTH IN / CM		TWIST RATE	OVERALL LENGTH IN / CM		WEIGHT LB / KG		SAFETY	SLIDE COLOR	GRIP COLOR	SIGHTS
67055	SEMI AUTO	9MM LUGER	10+1 & 13+1	3.2	8,1	10	6.2	15,8	1.3	,6	FIXED	BLACK	FDE	DOT SIGHTS
67056	SEMI AUTO	9MM LUGER	10+1 & 13+1	3.2	8,1	10	6.2	15,8	1.3	,6	FIXED	BLACK	FDE	NIGHT SIGHTS
67057	SEMI AUTO	9MM LUGER	10+1 & 13+1	3.2	8,1	10	6.2	15,8	1.3	,6	FIXED	BLACK	FDE	RED DOT
67064	SEMI AUTO	9MM LUGER	10+1 & 13+1	3.2	8,1	10	6.2	15,8	1.3	,6	FIXED	BLACK	FDE	DOT SIGHTS
67065	SEMI AUTO	9MM LUGER	10+1 & 13+1	3.2	8,1	10	6.2	15,8	1.3	,6	FIXED	BLACK	FDE	NIGHT SIGHTS

NEW//// STANCE XR GRAY

PART #	ACTION	CALIBER	ROUND CPTY	BARREL LENGTH IN / CM		TWIST RATE	OVERALL LENGTH IN / CM		WEIGHT LB / KG		SAFETY	SLIDE COLOR	GRIP COLOR	SIGHTS
67066	SEMI AUTO	9MM LUGER	10+1 & 13+1	3.2	8,1	10	6.2	15,8	1.3	,6	FIXED	BLACK	GRAY	DOT SIGHTS
67067	SEMI AUTO	9MM LUGER	10+1 & 13+1	3.2	8,1	10	6.2	15,8	1.3	,6	FIXED	BLACK	GRAY	NIGHT SIGHTS
67058	SEMI AUTO	9MM LUGER	10+1 & 13+1	3.2	8,1	10	6.2	15,8	1.3	,6	FIXED	BLACK	GRAY	RED DOT
67059	SEMI AUTO	9MM LUGER	10+1 & 13+1	3.2	8,1	10	6.2	15,8	1.3	,6	FIXED	BLACK	GRAY	DOT SIGHTS
67060	SEMI AUTO	9MM LUGER	10+1 & 13+1	3.2	8,1	10	6.2	15,8	1.3	,6	FIXED	BLACK	GRAY	NIGHT SIGHTS

2025

110 PCS

Savage once again proves there's no limit to the adaptability of the Model 110. The new 110 PCS is a bolt-action pistol built around the 110's factory blueprinted action. The 110 PCS has a user-adjustable AccuTrigger™ for a crisp, clean pull. The action is secured in a one-piece aluminum chassis from Modular Driven Technologies (MDT) and includes an AICS-style detachable box magazine. The 110 PCS combines compact performance with the Model 110's exceptional reputation for accuracy and reliability. This is Savage.

- Carbon steel, matte black, barrel and receiver
- Medium-contour 10.5" barrel, with threaded muzzle; 5/8-24 (223 REM threaded ½-28)
- Machined aluminum, 1-piece chassis with 7" free floating modular forend with M-Lok slots and Cerakote finish
- Picatinny rail
- Left hand bolt handle, right side eject
- Spiral fluted bolt body
- 2.5-6 lb user-adjustable AccuTrigger™
- Picatinny rail at rear of chassis
- Accepts most AR-15 pistol grips
- Barricade grooves milled into the front of the magazine well
- Ambidextrous magazine release and AICS style magazine

SAVAGE®

SPECIFICATIONS SUBJECT TO CHANGE WITHOUT NOTICE.

110 PCS

5 CALIBERS // 1 MODEL

223 REM · 300 BLK · 6.5 CREEDMOOR

308 WIN · 350 LEGEND

LEFT HAND BOLT HANDLE

MEDIUM-CONTOUR 10.5" BARREL
with threaded muzzle

SPIRAL BOLT AND PICATINNY RAIL

110 PCS

	PART #	ACTION	CALIBER	ROUND CPTY	STOCK	STOCK COLOR	BARREL	BARREL LENGTH IN / CM		TWIST RATE	OVERALL LENGTH IN / CM		WEIGHT LB / KG		ACCUTRIGGER ADJ.
	57797	BOLT	6.5 CREEDMOOR	10	1-PIECE ALUMINUM MDT CHASSIS	MATTE BLACK CERAKOTE	CARBON STEEL BARREL	10.5	26,7	8	21.5	54,6	5.6	2,5	2.5-6 LBS
	57798	BOLT	308 WIN	10	1-PIECE ALUMINUM MDT CHASSIS	MATTE BLACK CERAKOTE	CARBON STEEL BARREL	10.5	26,7	10	21.5	54,6	5.6	2,5	2.5-6 LBS
	57799	BOLT	350 LEGEND	10	1-PIECE ALUMINUM MDT CHASSIS	MATTE BLACK CERAKOTE	CARBON STEEL BARREL	10.5	26,7	16	21.5	54,6	5.6	2,5	2.5-6 LBS
	57800	BOLT	300 BLK	10	1-PIECE ALUMINUM MDT CHASSIS	MATTE BLACK CERAKOTE	CARBON STEEL BARREL	10.5	26,7	8	21.5	54,6	5.6	2,5	2.5-6 LBS
	57801	BOLT	223 REM	10	1-PIECE ALUMINUM MDT CHASSIS	MATTE BLACK CERAKOTE	CARBON STEEL BARREL	10.5	26,7	9	21.5	54,6	5.6	2,5	2.5-6 LBS
NEW	58134	BOLT	400 LEGEND	4	1-PIECE ALUMINUM MDT CHASSIS	MATTE BLACK CERAKOTE	CARBON STEEL BARREL	10.5	26,7	16	21.5	54,6	5.6	2,5	2.5-6 LBS

2025

IMPULSE

STRAIGHT SPEED SAVAGE ACCURACY

110 PCS

IMPULSE™

1. HEXLOCK
a robust bolt design with bearings that expand to allow for superior safety. As gas pressure from a fired round builds, HEXLOCK remains engaged.

2. ROBUST LOCK UP
design with free floating, interchangeable bolt head.

3. MULTI-POSITION, AMBIDEXTROUS BOLT HANDLE
allows for multiple positions for the bolt angle, in addition to right or left hand position, and also serves as a security key to the gun.

4. INTEGRAL MIL-SPEC PICATINNY RAIL
enables reliable and sturdy mounting with multiple optic mount options.

PROVEN FOUR-BOLT BARREL CLAMP
with integral lock provides easy disassembly and repeatable zero.

SELF-CONTAINED MODULAR SUBASSEMBLIES
enable simple toolless disassembly and assembly.

SAVAGE®

SPECIFICATIONS SUBJECT TO CHANGE WITHOUT NOTICE.

STRAIGHT-PULL BOLT ACTION DESIGN | INNOVATIVE TECHNOLOGIES | SAFETY FOCUSED

5. AMBIDEXTROUS TANG SAFETY
magazine release, and bolt release allow for intuitive operation.

7. SINGLE STEP SIDEBOLT RELEASE
with no manipulation required on bolt insertion.

6. SINGLE STEP QUICK RELEASE
button unlocks the bolt and automatically resets, eliminating cycling failures.

8. CYLINDRICAL BOLT
design allows for smooth handling and prevents bolt bind.

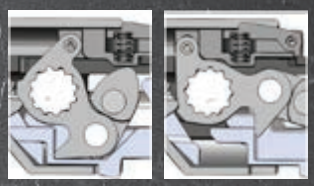

ROTARY BOLT HANDLE
allows for controlled loading, leveraged bolt close, and pre-extraction.

BARREL EXTENSION
with barrel locknut that allows for accurate headspace control.

2025

IMPULSE

WELCOME TO AMERICAN STRAIGHT-PULL. BUILT FOR SPEED. BUILT FOR ACCURACY.

Experience the natural feel, lightning-fast speed and exceptional accuracy of the all-new IMPULSE. Built here and engineered for the demands of the American shooter – straight-pull action combines the confidence and accuracy of a traditional bolt with the speed of a semi-automatic. The pure movement allows for faster follow-up shots with quicker target reacquisition for instinctive, repeatable accuracy.

- AccuStock™ with AccuFit™ adjustable length-of-pull and comb height
- User-adjustable AccuTrigger™
- Proven four-bolt barrel clamp with integral lock provides easy disassembly and repeatable zero
- Self-contained modular subassemblies enable simple tool-less disassembly and assembly
- Rotary bolt handle allows for controlled loading, leveraged bolt close, and pre-extraction
- Camo, Gray or Green synthetic stock
- MDT 1-piece aluminum ACC chassis with fully adjustable length-of-pull and comb height (Elite Precision model only)
- Threaded barrel 5/8-24" (except all Driven Hunter models & 22-250 calibers, 1/2x28)
- Ambidextrous bolt handle
- Detachable box magazine
- 1-Piece 20 MOA rail machined into the aluminum receiver

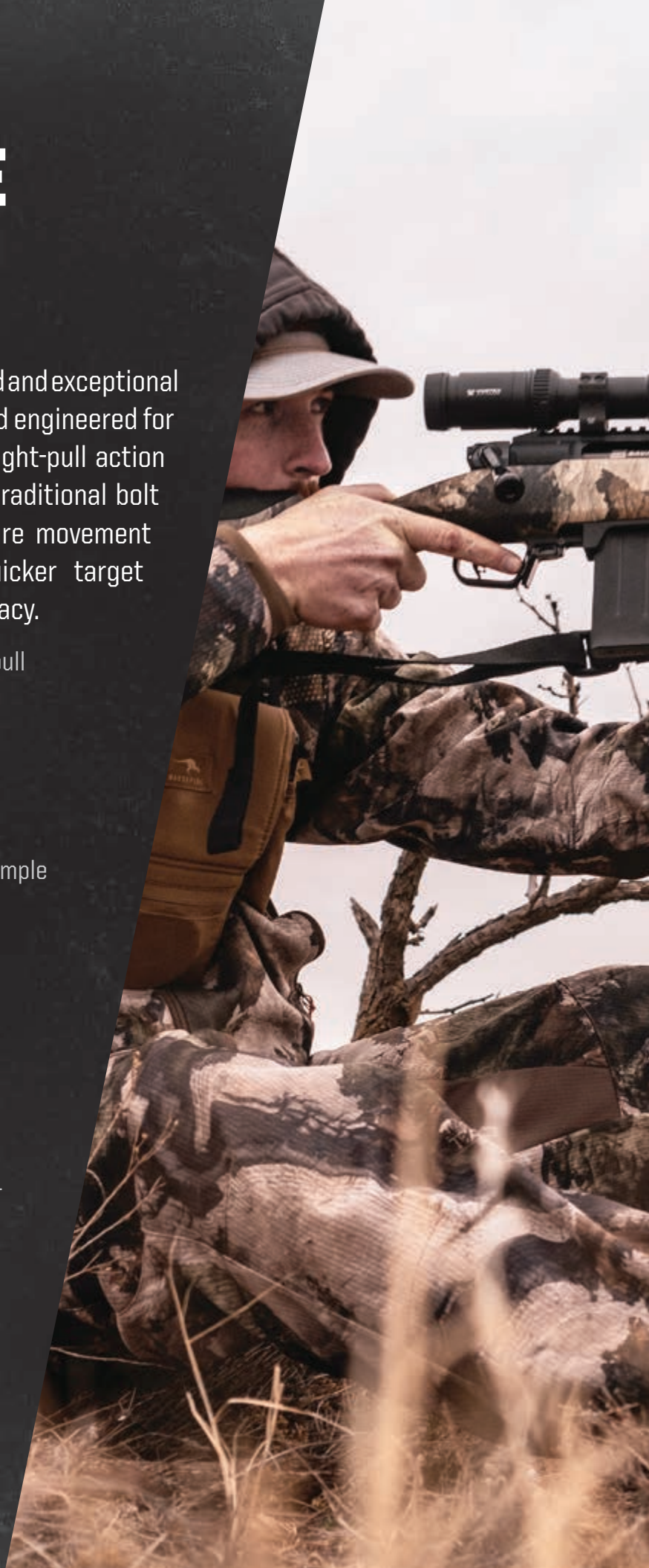

SAVAGE®

SPECIFICATIONS SUBJECT TO CHANGE WITHOUT NOTICE.

IMPULSE

15 CALIBERS // 7 MODELS

- 22-250 REM
- 243 WIN
- 6MM CREEDMOOR
- 6.5 CREEDMOOR
- 6.5 PRC
- 270 WIN
- 7MM REM MAG
- 7MM PRC
- 28 NOSLER
- 308 WIN
- 30-06 SPFLD
- 300 WSM
- 300 WIN MAG
- 300 PRC
- 338 LAPUA MAGNUM

20 MOA RAIL
MACHINED INTO THE RECEIVER

MDT CHASSIS
WITH ADJUSTABLE LENGTH-OF-PULL AND COMB HEIGHT

AICS STYLE MAGAZINE
(PREDATOR AND ELITE PRECISION MODELS)

ACCUFIT STOCK
(DRIVEN HUNTER, BIG GAME, PREDATOR, MOUNTAIN HUNTER AND HOG HUNTER MODELS)

2025

IMPULSE

IMPULSE KLYM

PART #	CALIBER	ROUND CPTY	STOCK	STOCK COLOR	BARREL	BARREL LENGTH IN / CM		TWIST RATE	OVERALL LENGTH IN / CM		WEIGHT LB / KG		ACCUTRIGGER ADJ.
56299	6.5 CREEDMOOR	4	FBT CARBON FIBER	GRAY	PROOF RESEARCH CARBON FIBER WRAPPED STAINLESS STEEL	22	55,9	8	45	115,3	6.6	3,0	1.5-4 LBS
56300	308 WIN	4	FBT CARBON FIBER	GRAY	PROOF RESEARCH CARBON FIBER WRAPPED STAINLESS STEEL	22	55,9	10	45	115,3	6.6	3,0	1.5-4 LBS
56301	6.5 PRC	2	FBT CARBON FIBER	GRAY	PROOF RESEARCH CARBON FIBER WRAPPED STAINLESS STEEL	24	61,0	8	47	120,4	6.7	3,1	1.5-4 LBS
56302	7MM PRC	2	FBT CARBON FIBER	GRAY	PROOF RESEARCH CARBON FIBER WRAPPED STAINLESS STEEL	22	55,9	8	45	115,3	6.7	3,0	1.5-4 LBS
56303	300 WIN MAG	3	FBT CARBON FIBER	GRAY	PROOF RESEARCH CARBON FIBER WRAPPED STAINLESS STEEL	24	61,0	10	47	120,4	6.6	3,1	1.5-4 LBS
56304	300 WSM	2	FBT CARBON FIBER	GRAY	PROOF RESEARCH CARBON FIBER WRAPPED STAINLESS STEEL	24	61,0	10	47	120,4	6.7	3,0	1.5-4 LBS

IMPULSE DRIVEN HUNTER

PART #	CALIBER	ROUND CPTY	STOCK	STOCK COLOR	BARREL	BARREL LENGTH IN / CM		TWIST RATE	OVERALL LENGTH IN / CM		WEIGHT LB / KG		ACCUTRIGGER ADJ.
56271	6.5 CREEDMOOR	4	ACCUSTOCK WITH ACCUFIT	GRAY	CARBON STEEL SPORTER BARREL	20	50,8	8	41	104,9	7.2	3,3	1.5-4 LBS
56270	308 WIN	4	ACCUSTOCK WITH ACCUFIT	GRAY	CARBON STEEL SPORTER BARREL	18	45,7	10	39	99,8	7.1	3,1	1.5-4 LBS
56274	30-06 SPFLD	4	ACCUSTOCK WITH ACCUFIT	GRAY	CARBON STEEL SPORTER BARREL	18	45,7	10	39	99,8	7.1	3,1	1.5-4 LBS
56275	300 WIN MAG	3	ACCUSTOCK WITH ACCUFIT	GRAY	CARBON STEEL SPORTER BARREL	20	50,8	10	41	104,9	7.2	3,3	1.5-4 LBS

SPECIFICATIONS SUBJECT TO CHANGE WITHOUT NOTICE.

IMPULSE MOUNTAIN HUNTER

PART #	CALIBER	ROUND CPTY	STOCK	STOCK COLOR	BARREL	BARREL LENGTH IN / CM		TWIST RATE	OVERALL LENGTH IN / CM		WEIGHT LB / KG		ACCUTRIGGER ADJ.
56248	308 WIN	4	ACCUSTOCK WITH ACCUFIT	GRAY	PROOF RESEARCH CARBON FIBER WRAPPED STAINLESS STEEL	22	55,9	10	43.5	110,5	7.1	3,2	1.5-4 LBS
56249	6.5 CREEDMOOR	4	ACCUSTOCK WITH ACCUFIT	GRAY	PROOF RESEARCH CARBON FIBER WRAPPED STAINLESS STEEL	22	55,9	8	43.5	110,5	7.1	3,2	1.5-4 LBS
56250	300 WSM	2	ACCUSTOCK WITH ACCUFIT	GRAY	PROOF RESEARCH CARBON FIBER WRAPPED STAINLESS STEEL	24	61,0	10	43.5	110,5	7.4	3,4	1.5-4 LBS
56251	6.5 PRC	2	ACCUSTOCK WITH ACCUFIT	GRAY	PROOF RESEARCH CARBON FIBER WRAPPED STAINLESS STEEL	24	61,0	8	45.5	115,6	7.4	3,4	1.5-4 LBS
56252	270 WIN	4	ACCUSTOCK WITH ACCUFIT	GRAY	PROOF RESEARCH CARBON FIBER WRAPPED STAINLESS STEEL	22	55,9	10	45.5	115,6	7.1	3,2	1.5-4 LBS
56253	30-06 SPFLD	4	ACCUSTOCK WITH ACCUFIT	GRAY	PROOF RESEARCH CARBON FIBER WRAPPED STAINLESS STEEL	22	55,9	10	43.5	110,5	7.1	3,2	1.5-4 LBS
56254	28 NOSLER	2	ACCUSTOCK WITH ACCUFIT	GRAY	PROOF RESEARCH CARBON FIBER WRAPPED STAINLESS STEEL	24	61,0	8	43.5	110,5	7.4	3,4	1.5-4 LBS
56255	7MM REM MAG	3	ACCUSTOCK WITH ACCUFIT	GRAY	PROOF RESEARCH CARBON FIBER WRAPPED STAINLESS STEEL	24	61,0	9	45.5	115,6	7.4	3,4	1.5-4 LBS
56256	300 WIN MAG	3	ACCUSTOCK WITH ACCUFIT	GRAY	PROOF RESEARCH CARBON FIBER WRAPPED STAINLESS STEEL	24	61,0	10	45.5	115,6	7.4	3,4	1.5-4 LBS
56257	300 PRC	5	ACCUSTOCK WITH ACCUFIT	GRAY	PROOF RESEARCH CARBON FIBER WRAPPED STAINLESS STEEL	24	61,0	9	45.5	115,6	7.4	3,4	1.5-4 LBS
56244	7MM PRC	2	ACCUSTOCK WITH ACCUFIT	GRAY	PROOF RESEARCH CARBON FIBER WRAPPED STAINLESS STEEL	22	55,9	8	43.5	110,5	7.3	3,3	1.5-4 LBS

IMPULSE ELITE PRECISION

PART #	CALIBER	ROUND CPTY	STOCK	STOCK COLOR	BARREL	BARREL LENGTH IN / CM		TWIST RATE	OVERALL LENGTH IN / CM		WEIGHT LB / KG		ACCUTRIGGER ADJ.
57887	308 WIN	10	MDT 1-PIECE ALUMINUM ACC CHASSIS	GRAY CERAKOTE	STAINLESS STEEL, MODIFIED PALMA CONTOUR BARREL	26	66,0	10	48.8	123,8	13.7	6,2	1.5-4 LBS
57888	6.5 CREEDMOOR	10	MDT 1-PIECE ALUMINUM ACC CHASSIS	GRAY CERAKOTE	STAINLESS STEEL, MODIFIED PALMA CONTOUR BARREL	26	66,0	8	48.8	123,8	13.7	6,2	1.5-4 LBS
57889	6MM CREEDMOOR	10	MDT 1-PIECE ALUMINUM ACC CHASSIS	GRAY CERAKOTE	STAINLESS STEEL, MODIFIED PALMA CONTOUR BARREL	26	66,0	7.5	48.8	123,8	13.7	6,2	1.5-4 LBS
57890	6.5 PRC	7	MDT 1-PIECE ALUMINUM ACC CHASSIS	GRAY CERAKOTE	STAINLESS STEEL, MODIFIED PALMA CONTOUR BARREL	26	66,0	8	48.8	123,8	13.7	6,2	1.5-4 LBS
57891	300 PRC	5	MDT 1-PIECE ALUMINUM ACC CHASSIS	GRAY CERAKOTE	STAINLESS STEEL, MODIFIED PALMA CONTOUR BARREL	30	76,2	8.5	52.8	134,0	14.5	6,6	1.5-4 LBS
57892	300 WIN MAG	5	MDT 1-PIECE ALUMINUM ACC CHASSIS	GRAY CERAKOTE	STAINLESS STEEL, MODIFIED PALMA CONTOUR BARREL	30	76,2	9.3	52.8	134,0	14.5	6,6	1.5-4 LBS
57893	338 LAPUA	5	MDT 1-PIECE ALUMINUM ACC CHASSIS	GRAY CERAKOTE	STAINLESS STEEL, MODIFIED PALMA CONTOUR BARREL	30	76,2	9.3	52.8	134,0	14.5	6,6	1.5-4 LBS

IMPULSE BIG GAME

PART #	CALIBER	ROUND CPTY	STOCK	STOCK COLOR	BARREL	BARREL LENGTH IN / CM		TWIST RATE	OVERALL LENGTH IN / CM		WEIGHT LB / KG		ACCUTRIGGER ADJ.
56263	6.5 CREEDMOOR	4	ACCUSTOCK WITH ACCUFIT	SAVAGE CAMO - WOODLAND	HAZEL GREEN CERAKOTE, CARBON STEEL FLUTED	22	55,9	8	43.5	110,5	8.8	4,0	1.5-4 LBS
56264	243 WIN	4	ACCUSTOCK WITH ACCUFIT	SAVAGE CAMO - WOODLAND	HAZEL GREEN CERAKOTE, CARBON STEEL FLUTED	22	55,9	9.3	43.5	110,5	8.8	4,0	1.5-4 LBS
56265	308 WIN	4	ACCUSTOCK WITH ACCUFIT	SAVAGE CAMO - WOODLAND	HAZEL GREEN CERAKOTE, CARBON STEEL FLUTED	22	55,9	10	43.5	110,5	8.8	4,0	1.5-4 LBS
56268	300 WSM	2	ACCUSTOCK WITH ACCUFIT	SAVAGE CAMO - WOODLAND	HAZEL GREEN CERAKOTE, CARBON STEEL FLUTED	24	61,0	10	45.5	115,6	8.9	4,0	1.5-4 LBS
56266	30-06 SPFLD	4	ACCUSTOCK WITH ACCUFIT	SAVAGE CAMO - WOODLAND	HAZEL GREEN CERAKOTE, CARBON STEEL FLUTED	22	55,9	10	43.5	110,5	8.8	4,0	1.5-4 LBS
56267	300 WIN MAG	3	ACCUSTOCK WITH ACCUFIT	SAVAGE CAMO - WOODLAND	HAZEL GREEN CERAKOTE, CARBON STEEL FLUTED	24	61,0	10	45.5	115,6	8.9	4,0	1.5-4 LBS
56276	7MM PRC	2	ACCUSTOCK WITH ACCUFIT	SAVAGE CAMO - WOODLAND	HAZEL GREEN CERAKOTE, CARBON STEEL FLUTED	22	55,9	8	43.5	110,5	8.9	4,0	1.5-4 LBS

IMPULSE HOG HUNTER

PART #	CALIBER	ROUND CPTY	STOCK	STOCK COLOR	BARREL	BARREL LENGTH IN / CM		TWIST RATE	OVERALL LENGTH IN / CM		WEIGHT LB / KG		ACCUTRIGGER ADJ.
57653	308 WIN	4	ACCUSTOCK WITH ACCUFIT	OD GREEN	MEDIUM CONTOUR, CARBON STEEL BARREL	18	45,7	10	39.3	99,7	8.4	3,8	1.5-4 LBS
57654	6.5 CREEDMOOR	4	ACCUSTOCK WITH ACCUFIT	OD GREEN	MEDIUM CONTOUR, CARBON STEEL BARREL	20	50,8	8	41.5	105,4	8.5	3,9	1.5-4 LBS
57655	30-06 SPFLD	4	ACCUSTOCK WITH ACCUFIT	OD GREEN	MEDIUM CONTOUR, CARBON STEEL BARREL	20	50,8	10	41.5	105,4	8.7	4,0	1.5-4 LBS
57656	300 WIN MAG	3	ACCUSTOCK WITH ACCUFIT	OD GREEN	MEDIUM CONTOUR, CARBON STEEL BARREL	24	61,0	10	44.3	112,4	9.1	4,1	1.5-4 LBS

IMPULSE PREDATOR

PART #	CALIBER	ROUND CPTY	STOCK	STOCK COLOR	BARREL	BARREL LENGTH IN / CM		TWIST RATE	OVERALL LENGTH IN / CM		WEIGHT LB / KG		ACCUTRIGGER ADJ.
57657	22-250 REM	10	ACCUSTOCK WITH ACCUFIT	MOSSY OAK TERRA GILA	MEDIUM CONTOUR, CARBON STEEL BARREL	20	50,8	12	41.5	105,4	8.7	4,0	1.5-4 LBS
57658	243 WIN	10	ACCUSTOCK WITH ACCUFIT	MOSSY OAK TERRA GILA	MEDIUM CONTOUR, CARBON STEEL BARREL	20	50,8	9.3	41.3	104,8	8.8	4,0	1.5-4 LBS
57659	308 WIN	10	ACCUSTOCK WITH ACCUFIT	MOSSY OAK TERRA GILA	MEDIUM CONTOUR, CARBON STEEL BARREL	20	50,8	10	41.3	104,8	8.8	4,0	1.5-4 LBS
57660	6.5 CREEDMOOR	10	ACCUSTOCK WITH ACCUFIT	MOSSY OAK TERRA GILA	MEDIUM CONTOUR, CARBON STEEL BARREL	20	50,8	8	41.3	104,8	8.8	4,0	1.5-4 LBS

SAVAGE

2025

MODEL 110

1. ACCUFIT™

We all know proper fit of a rifle is key to repeatable accuracy. The Savage AccuFit system allows for easy adjustment to length of pull and comb riser height. Five different comb risers allow you to set the perfect height for your size, optic height and shooting preference. Four stock inserts ensure the proper length of pull so the firearm truly fits you.

NOTE: AccuTrigger™ is shown red for emphasis. Actual color is silver. For more information, see video at: savagearms.com

2. ACCUTRIGGER™

Savage's AccuTrigger™ is the standard by which all factory triggers are judged. The system is easily adjustable, offers a light, clean pull with no creep, and prevents the firearm from discharging if jarred or dropped. Shooters can set the trigger pull to their preferences without having to pay a gunsmith. The AccuTrigger cannot accidentally discharge during normal use. While the trigger is being pulled, the integrated AccuRelease is intentionally depressed, which unblocks the sear and allows the rifle to fire.

3. FLOATING BOLT HEAD

Savage's floating bolt head adjusts itself for a perfect fit. By moving just a few thousandths of an inch, the head aligns with the bolt face, cartridge, and chamber.

SAVAGE®

SPECIFICATIONS SUBJECT TO CHANGE WITHOUT NOTICE.

4. ACCUSTOCK™ BEDDING

When a cartridge fires, harmonic waves travel the length of the barrel. This movement affects how the bullet travels. Repeatable accuracy requires a firmly bedded action. The Savage AccuStock embeds a rigid rail system in the stock throughout the forend. Rather than connecting the action to the stock with one or two screws, the AccuStock engages the action along its entire length.

5. HEADSPACE CONTROL

At Savage, we set headspace by carefully threading barrels into place with their matched actions and bolts. This hand-fit, zero-tolerance process results in a perfectly matched set that is then locked in with a barrel locknut.

6. PRECISION BUTTON RIFLED BARRELS

Accurate barrels require specialized machinery and experienced operators. Savage proudly employs both. Savage's centerfire barrels-from the Team Savage competitor's F Class rifle to the one going on your kid's first deer rifle – are checked and, if needed, hand-straightened by the same skilled craftsman.

2025

MODEL 110

The longest continuously manufactured bolt action rifle in North America is now even better. The Model 110 family has a fresh look and full of improvements. Select models feature the AccuFit™ system, which lets you lock in a custom fit for fast target acquisition and enhanced accuracy. Big game hunting, varmints, predators, target shooting, and more – we have a Savage Model 110 for you!

- AccuStock™ with AccuFit™ adjustable length-of-pull and comb height *(select models)*
- User-adjustable AccuTrigger™
- Detachable box magazine
- Receivers and barrels machined from barstock
- FDE or Gray synthetic stocks
- Camo stock available
- Walnut stock on 110 Classic
- Soft grip over-mold fore-end and pistol grip surfaces *(select models)*
- New Model 110 design and ergonomics
- Drilled and tapped for scope mounts
- Threaded barrels (5/8-24") (204 Ruger, 223 REM and 22-250 as 1/2x28) *(select models)*
- Precision button-rifled barrels

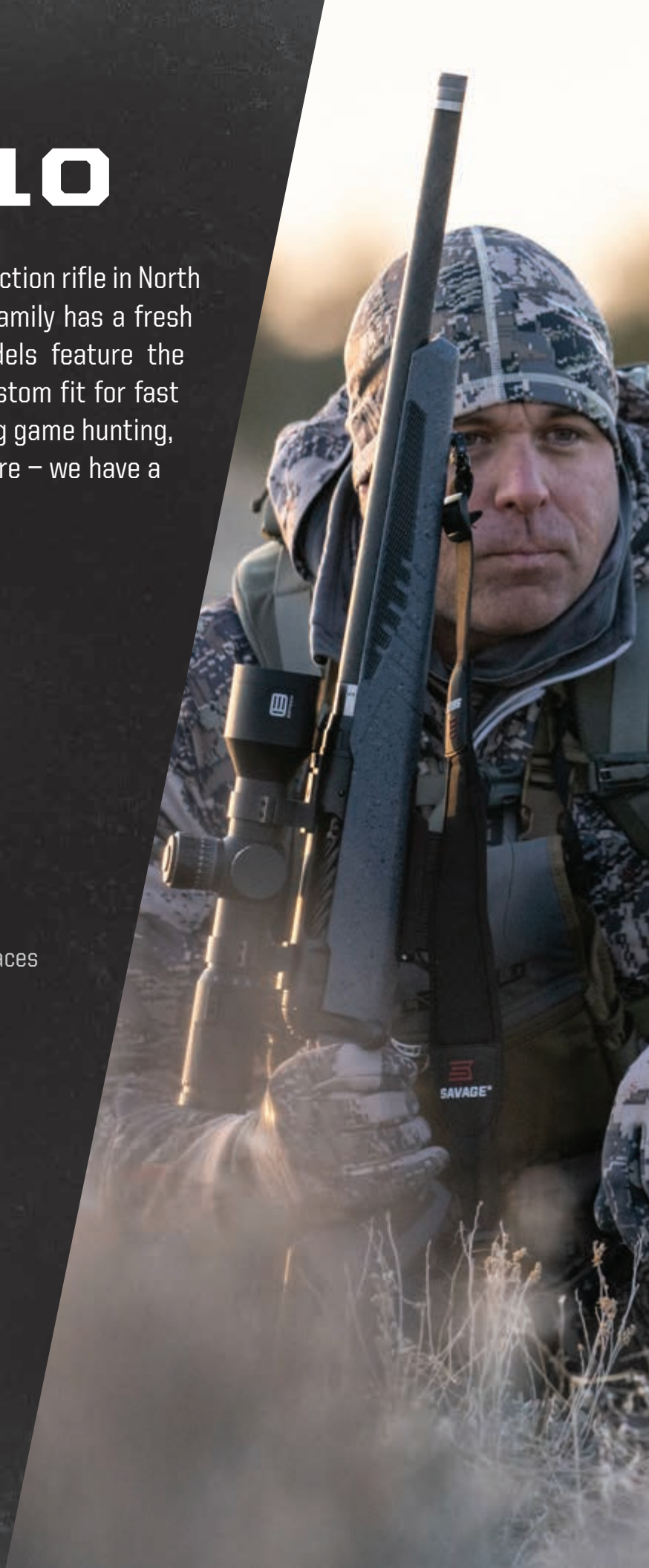

MODEL 110

SAVAGE®

SPECIFICATIONS SUBJECT TO CHANGE WITHOUT NOTICE.

MODEL 110

29 CALIBERS // 31 MODELS

- 204 REM
- 223 REM
- 22-250 REM
- 243 WIN
- 25-06 REM
- 6MM ARC
- 6MM CREEDMOOR
- 260 REM
- 6.5 CREEDMOOR
- 6.5 X 284 NORMA
- 6.5 PRC
- 270 WIN
- 270 WSM
- 7MM-08 REM
- 280 AI
- 7MM REM MAG
- 7MM PRC
- 28 NOSLER
- 300 BLACKOUT
- 308 WIN
- 30-06 SPFLD
- 300 WSM
- 300 WIN MAG
- 300 PRC
- 338 WIN MAG
- 350 LEGEND
- 375 RUGER
- 400 LEGEND
- 450 BUSHMASTER

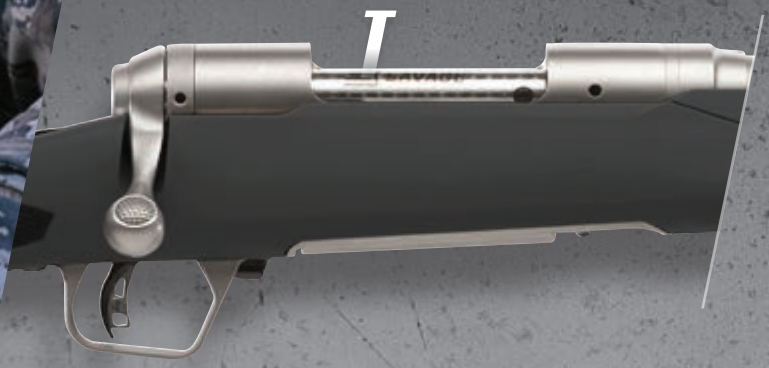

ACTION

Longest continuously manufactured bolt action rifle

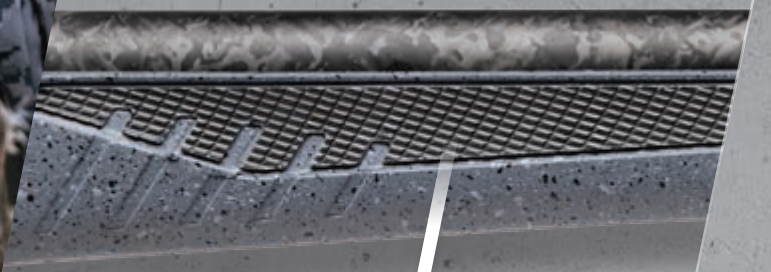

OVERMOLD TOUCH POINTS

ACCUTRIGGER

2025

MODEL 110

NEW//// 110 PPR

PART #	ACTION	CALIBER	ROUND CPTY	STOCK	STOCK COLOR	BARREL	BARREL LENGTH IN / CM	TWIST RATE	OVERALL LENGTH IN / CM	WEIGHT LB / KG	ACCUTRIGGER ADJ.
56237	BOLT	308 WIN	3	GRAYBOE PHOENIX 2	EARTH TONE CAMO WITH BLACK WEB	PROOF RESEARCH CARBON FIBER WRAPPED STAINLESS STEEL	20 50,8	10	41.5 105,4	7.2 3,3	1.5-4 LBS
56328	BOLT	6.5 CREEDMOOR	3	GRAYBOE PHOENIX 2	EARTH TONE CAMO WITH BLACK WEB	PROOF RESEARCH CARBON FIBER WRAPPED STAINLESS STEEL	20 50,8	8	41.5 105,4	7.2 3,3	1.5-4 LBS
56329	BOLT	300 WSM	3	GRAYBOE PHOENIX 2	EARTH TONE CAMO WITH BLACK WEB	PROOF RESEARCH CARBON FIBER WRAPPED STAINLESS STEEL	20 50,8	10	41.5 105,4	7.3 3,3	1.5-4 LBS
56330	BOLT	6.5 PRC	3	GRAYBOE PHOENIX 2	EARTH TONE CAMO WITH BLACK WEB	PROOF RESEARCH CARBON FIBER WRAPPED STAINLESS STEEL	20 50,8	8	41.5 105,4	7.3 3,3	1.5-4 LBS
56331	BOLT	28 NOSLER	3	GRAYBOE PHOENIX 2	EARTH TONE CAMO WITH BLACK WEB	PROOF RESEARCH CARBON FIBER WRAPPED STAINLESS STEEL	20 50,8	8.44	42.3 107,3	7.4 3,4	1.5-4 LBS
56332	BOLT	30-06 SPFLD	3	GRAYBOE PHOENIX 2	EARTH TONE CAMO WITH BLACK WEB	PROOF RESEARCH CARBON FIBER WRAPPED STAINLESS STEEL	20 50,8	10	42.3 107,3	7.4 3,4	1.5-4 LBS
56333	BOLT	270 WIN	3	GRAYBOE PHOENIX 2	EARTH TONE CAMO WITH BLACK WEB	PROOF RESEARCH CARBON FIBER WRAPPED STAINLESS STEEL	20 50,8	10	42.3 107,3	7.4 3,4	1.5-4 LBS
56334	BOLT	300 WIN MAG	3	GRAYBOE PHOENIX 2	EARTH TONE CAMO WITH BLACK WEB	PROOF RESEARCH CARBON FIBER WRAPPED STAINLESS STEEL	20 50,8	10	42.3 107,3	7.4 3,4	1.5-4 LBS
56336	BOLT	7MM PRC	3	GRAYBOE PHOENIX 2	EARTH TONE CAMO WITH BLACK WEB	PROOF RESEARCH CARBON FIBER WRAPPED STAINLESS STEEL	20 50,8	8	42.3 107,3	7.4 3,4	1.5-4 LBS

110 ULTRALITE ELITE

PART #	ACTION	CALIBER	ROUND CPTY	STOCK	STOCK COLOR	BARREL	BARREL LENGTH IN / CM	TWIST RATE	OVERALL LENGTH IN / CM	WEIGHT LB / KG	ACCUTRIGGER ADJ.
56320	BOLT	6.5 CREEDMOOR	3	ADJUSTABLE LOP AND COMB	MDT HNT26 CHASSIS	PROOF RESEARCH CARBON FIBER WRAPPED STAINLESS STEEL	18 45,7	8	38.5 97,8	5.8 2,6	1.5-4 LBS
56321	BOLT	308 WIN	3	ADJUSTABLE LOP AND COMB	MDT HNT26 CHASSIS	PROOF RESEARCH CARBON FIBER WRAPPED STAINLESS STEEL	18 45,7	10	38.5 97,8	5.8 2,6	1.5-4 LBS
56322	BOLT	6.5 PRC	3	ADJUSTABLE LOP AND COMB	MDT HNT26 CHASSIS	PROOF RESEARCH CARBON FIBER WRAPPED STAINLESS STEEL	20 45,7	8	40.5 102,9	5.9 2,7	1.5-4 LBS
56323	BOLT	7MM PRC	3	ADJUSTABLE LOP AND COMB	MDT HNT26 CHASSIS	PROOF RESEARCH CARBON FIBER WRAPPED STAINLESS STEEL	20 45,7	8	41.3 104,8	6.2 2,8	1.5-4 LBS
56324	BOLT	300 WIN MAG	3	ADJUSTABLE LOP AND COMB	MDT HNT26 CHASSIS	PROOF RESEARCH CARBON FIBER WRAPPED STAINLESS STEEL	20 45,7	10	41.3 104,8	6.2 2,8	1.5-4 LBS
56325	BOLT	300 WSM	3	ADJUSTABLE LOP AND COMB	MDT HNT26 CHASSIS	PROOF RESEARCH CARBON FIBER WRAPPED STAINLESS STEEL	20 45,7	10	40.5 102,9	5.9 2,7	1.5-4 LBS

SAVAGE®

SPECIFICATIONS SUBJECT TO CHANGE WITHOUT NOTICE.

110 KLYM

PART #	ACTION	CALIBER	ROUND CPTY	STOCK	STOCK COLOR	BARREL	BARREL LENGTH IN / CM		TWIST RATE	OVERALL LENGTH IN / CM		WEIGHT LB / KG		ACCUTRIGGER ADJ.
56293	BOLT	6.5 CREEDMOOR	4	FBT CARBON FIBER	GRAY	PROOF RESEARCH CARBON FIBER WRAPPED STAINLESS STEEL	22	55,9	8	44.8	113,8	5.9	2,7	1.5-4 LBS
56294	BOLT	308 WIN	4	FBT CARBON FIBER	GRAY	PROOF RESEARCH CARBON FIBER WRAPPED STAINLESS STEEL	22	55,9	10	44.8	113,8	5.9	2,7	1.5-4 LBS
56295	BOLT	6.5 PRC	2	FBT CARBON FIBER	GRAY	PROOF RESEARCH CARBON FIBER WRAPPED STAINLESS STEEL	24	61,0	8	46.8	118,9	6.0	2,7	1.5-4 LBS
56296	BOLT	7MM PRC	2	FBT CARBON FIBER	GRAY	PROOF RESEARCH CARBON FIBER WRAPPED STAINLESS STEEL	22	55,9	8	45.6	115,8	6.0	2,7	1.5-4 LBS
56297	BOLT	300 WIN MAG	3	FBT CARBON FIBER	GRAY	PROOF RESEARCH CARBON FIBER WRAPPED STAINLESS STEEL	24	61,0	10	47.6	120,9	6.1	2,8	1.5-4 LBS
56298	BOLT	300 WSM	2	FBT CARBON FIBER	GRAY	PROOF RESEARCH CARBON FIBER WRAPPED STAINLESS STEEL	24	61,0	10	46.8	118,9	6.0	2,7	1.5-4 LBS

110 MAGPUL SCOUT

	PART #	ACTION	CALIBER	ROUND CPTY	STOCK	STOCK COLOR	BARREL	BARREL LENGTH IN / CM		TWIST RATE	OVERALL LENGTH IN / CM		WEIGHT LB / KG		ACCUTRIGGER ADJ.
	56338	BOLT	6.5 CREEDMOOR	10	MAGPUL® HUNTER STOCK W/ ADJUSTABLE LOP	BLACK	MATTE BLACK CARBON STEEL	16.5	41,9	8	38.5	97,8	8.4	3,8	1.5-4 LBS
	56339	BOLT	308 WIN	10	MAGPUL® HUNTER STOCK W/ ADJUSTABLE LOP	BLACK	MATTE BLACK CARBON STEEL	16.5	41,9	10	38.5	97,8	8.4	3,8	1.5-4 LBS
	56344	BOLT	450 BUSHMASTER	4	MAGPUL® HUNTER STOCK W/ ADJUSTABLE LOP	BLACK	MATTE BLACK CARBON STEEL	16.5	41,9	24	38.5	97,8	8.4	3,8	1.5-4 LBS
NEW	56337	BOLT	223 REM	10	MAGPUL® HUNTER STOCK W/ ADJUSTABLE LOP	BLACK	MATTE BLACK CARBON STEEL	16.5	45,7	7	38.5	97,8	8.4	3,8	1.5-4 LBS
NEW	56340	BOLT	300 BLACKOUT	10	MAGPUL® HUNTER STOCK W/ ADJUSTABLE LOP	BLACK	MATTE BLACK CARBON STEEL	16.5	45,7	8	38.5	97,8	8.4	3,8	1.5-4 LBS
NEW	56341	BOLT	6MM ARC	10	MAGPUL® HUNTER STOCK W/ ADJUSTABLE LOP	BLACK	MATTE BLACK CARBON STEEL	16.5	45,7	7.5	38.5	97,8	8.4	3,8	1.5-4 LBS
NEW	56342	BOLT	350 LEGEND	10	MAGPUL® HUNTER STOCK W/ ADJUSTABLE LOP	BLACK	MATTE BLACK CARBON STEEL	16.5	45,7	16	38.5	97,8	8.4	3,8	1.5-4 LBS
	LEFT HAND MODELS														
	56346	BOLT	6.5 CREEDMOOR	10	MAGPUL® HUNTER STOCK W/ ADJUSTABLE LOP	BLACK	MATTE BLACK CARBON STEEL	16.5	41,9	8	38.5	97,8	8.4	3,8	1.5-4 LBS
	56347	BOLT	308 WIN	10	MAGPUL® HUNTER STOCK W/ ADJUSTABLE LOP	BLACK	MATTE BLACK CARBON STEEL	16.5	41,9	10	38.5	97,8	8.4	3,8	1.5-4 LBS
	56352	BOLT	450 BUSHMASTER	4	MAGPUL® HUNTER STOCK W/ ADJUSTABLE LOP	BLACK	MATTE BLACK CARBON STEEL	16.5	41,9	24	38.5	97,8	8.4	3,8	1.5-4 LBS
NEW	56345	BOLT	223 REM	10	MAGPUL® HUNTER STOCK W/ ADJUSTABLE LOP	BLACK	MATTE BLACK CARBON STEEL	16.5	45,7	7	38.5	97,8	8.4	3,8	1.5-4 LBS
NEW	56348	BOLT	300 BLACKOUT	10	MAGPUL® HUNTER STOCK W/ ADJUSTABLE LOP	BLACK	MATTE BLACK CARBON STEEL	16.5	45,7	8	38.5	97,8	8.4	3,8	1.5-4 LBS
NEW	56349	BOLT	6MM ARC	10	MAGPUL® HUNTER STOCK W/ ADJUSTABLE LOP	BLACK	MATTE BLACK CARBON STEEL	16.5	45,7	7.5	38.5	97,8	8.4	3,8	1.5-4 LBS
NEW	56350	BOLT	350 LEGEND	10	MAGPUL® HUNTER STOCK W/ ADJUSTABLE LOP	BLACK	MATTE BLACK CARBON STEEL	16.5	45,7	16	38.5	97,8	8.4	3,8	1.5-4 LBS

110 MAGPUL SCOUT FDE

	PART #	ACTION	CALIBER	ROUND CPTY	STOCK	STOCK COLOR	BARREL	BARREL LENGTH IN / CM		TWIST RATE	OVERALL LENGTH IN / CM		WEIGHT LB / KG		ACCUTRIGGER ADJ.
	56354	BOLT	6.5 CREEDMOOR	10	MAGPUL® HUNTER STOCK W/ ADJUSTABLE LOP	FDE	MATTE BLACK CARBON STEEL	16.5	41,9	8	38.5	97,8	8.4	3,8	1.5-4 LBS
	56355	BOLT	308 WIN	10	MAGPUL® HUNTER STOCK W/ ADJUSTABLE LOP	FDE	MATTE BLACK CARBON STEEL	16.5	41,9	10	38.5	97,8	8.4	3,8	1.5-4 LBS
	56360	BOLT	450 BUSHMASTER	4	MAGPUL® HUNTER STOCK W/ ADJUSTABLE LOP	FDE	MATTE BLACK CARBON STEEL	16.5	41,9	24	38.5	97,8	8.4	3,8	1.5-4 LBS
NEW	56353	BOLT	223 REM	10	MAGPUL® HUNTER STOCK W/ ADJUSTABLE LOP	FDE	MATTE BLACK CARBON STEEL	16.5	45,7	7	38.5	97,8	8.4	3,8	1.5-4 LBS
NEW	56356	BOLT	300 BLACKOUT	10	MAGPUL® HUNTER STOCK W/ ADJUSTABLE LOP	FDE	MATTE BLACK CARBON STEEL	16.5	45,7	8	38.5	97,8	8.4	3,8	1.5-4 LBS
NEW	56357	BOLT	6MM ARC	10	MAGPUL® HUNTER STOCK W/ ADJUSTABLE LOP	FDE	MATTE BLACK CARBON STEEL	16.5	45,7	7.5	38.5	97,8	8.4	3,8	1.5-4 LBS
NEW	56358	BOLT	350 LEGEND	10	MAGPUL® HUNTER STOCK W/ ADJUSTABLE LOP	FDE	MATTE BLACK CARBON STEEL	16.5	45,7	16	38.5	97,8	8.4	3,8	1.5-4 LBS
	LEFT HAND MODELS														
	56362	BOLT	6.5 CREEDMOOR	10	MAGPUL® HUNTER STOCK W/ ADJUSTABLE LOP	FDE	MATTE BLACK CARBON STEEL	16.5	41,9	8	38.5	97,8	8.4	3,8	1.5-4 LBS
	56363	BOLT	308 WIN	10	MAGPUL® HUNTER STOCK W/ ADJUSTABLE LOP	FDE	MATTE BLACK CARBON STEEL	16.5	41,9	10	38.5	97,8	8.4	3,8	1.5-4 LBS
	56368	BOLT	450 BUSHMASTER	4	MAGPUL® HUNTER STOCK W/ ADJUSTABLE LOP	FDE	MATTE BLACK CARBON STEEL	16.5	41,9	24	38.5	97,8	8.4	3,8	1.5-4 LBS
NEW	56361	BOLT	223 REM	10	MAGPUL® HUNTER STOCK W/ ADJUSTABLE LOP	FDE	MATTE BLACK CARBON STEEL	16.5	45,7	7	38.5	97,8	8.4	3,8	1.5-4 LBS
NEW	56364	BOLT	300 BLACKOUT	10	MAGPUL® HUNTER STOCK W/ ADJUSTABLE LOP	FDE	MATTE BLACK CARBON STEEL	16.5	45,7	8	38.5	97,8	8.4	3,8	1.5-4 LBS
NEW	56365	BOLT	6MM ARC	10	MAGPUL® HUNTER STOCK W/ ADJUSTABLE LOP	FDE	MATTE BLACK CARBON STEEL	16.5	45,7	7.5	38.5	97,8	8.4	3,8	1.5-4 LBS
NEW	56366	BOLT	350 LEGEND	10	MAGPUL® HUNTER STOCK W/ ADJUSTABLE LOP	FDE	MATTE BLACK CARBON STEEL	16.5	45,7	16	38.5	97,8	8.4	3,8	1.5-4 LBS

MODEL 110 w/ACCUFIT™

110 CARBON TACTICAL

PART #	ACTION	CALIBER	ROUND CPTY	STOCK	STOCK COLOR	BARREL	BARREL LENGTH IN / CM		TWIST RATE	OVERALL LENGTH IN / CM		WEIGHT LB / KG		ACCUTRIGGER ADJ.
55998	BOLT	308 WIN	10	ACCUSTOCK WITH ACCUFIT	GRAY	PROOF RESEARCH CARBON FIBER WRAPPED STAINLESS STEEL	22	55,9	10	42.3	107,4	7.7	3,5	1.5-4 LBS
55999	BOLT	6.5 CREEDMOOR	10	ACCUSTOCK WITH ACCUFIT	GRAY	PROOF RESEARCH CARBON FIBER WRAPPED STAINLESS STEEL	22	55,9	8	42.3	107,4	7.7	3,5	1.5-4 LBS
56232	BOLT	6.5 PRC	7	ACCUSTOCK WITH ACCUFIT	GRAY	PROOF RESEARCH CARBON FIBER WRAPPED STAINLESS STEEL	24	61,0	8	44.3	112,5	8.0	3,6	1.5-4 LBS

110 CARBON PREDATOR

PART #	ACTION	CALIBER	ROUND CPTY	STOCK	STOCK COLOR	BARREL	BARREL LENGTH IN / CM		TWIST RATE	OVERALL LENGTH IN / CM		WEIGHT LB / KG		ACCUTRIGGER ADJ.
56225	BOLT	6MM ARC	10	ACCUSTOCK WITH ACCUFIT	GRAY W/ GRANITE TEXTURE	PROOF RESEARCH CARBON FIBER WRAPPED STAINLESS STEEL	18	45,7	7.5	38.3	97,3	6.8	3,1	1.5-4 LBS
56226	BOLT	223 REM	10	ACCUSTOCK WITH ACCUFIT	GRAY W/ GRANITE TEXTURE	PROOF RESEARCH CARBON FIBER WRAPPED STAINLESS STEEL	18	45,7	7	38.3	97,3	6.8	3,1	1.5-4 LBS
56227	BOLT	22-250 REM	10	ACCUSTOCK WITH ACCUFIT	GRAY W/ GRANITE TEXTURE	PROOF RESEARCH CARBON FIBER WRAPPED STAINLESS STEEL	22	55,9	12	42.3	107,4	7.2	3,3	1.5-4 LBS
56228	BOLT	308 WIN	5	ACCUSTOCK WITH ACCUFIT	GRAY W/ GRANITE TEXTURE	PROOF RESEARCH CARBON FIBER WRAPPED STAINLESS STEEL	18	45,7	10	38.3	97,3	6.9	3,1	1.5-4 LBS
56229	BOLT	6.5 CREEDMOOR	5	ACCUSTOCK WITH ACCUFIT	GRAY W/ GRANITE TEXTURE	PROOF RESEARCH CARBON FIBER WRAPPED STAINLESS STEEL	18	45,7	8	38.3	97,3	6.9	3,1	1.5-4 LBS
56230	BOLT	6.5 CREEDMOOR	5	ACCUSTOCK WITH ACCUFIT	GRAY W/ GRANITE TEXTURE	PROOF RESEARCH CARBON FIBER WRAPPED STAINLESS STEEL	22	55,9	8	42.3	107,4	7.2	3,3	1.5-4 LBS
56231	BOLT	300 BLK	10	ACCUSTOCK WITH ACCUFIT	GRAY W/ GRANITE TEXTURE	PROOF RESEARCH CARBON FIBER WRAPPED STAINLESS STEEL	16	40,6	8	36.3	92,2	6.6	3,0	1.5-4 LBS

110 CARBON TACTICAL FDE

PART #	ACTION	CALIBER	ROUND CPTY	STOCK	STOCK COLOR	BARREL	BARREL LENGTH IN / CM		TWIST RATE	OVERALL LENGTH IN / CM		WEIGHT LB / KG		ACCUTRIGGER ADJ.
56233	BOLT	308 WIN	10	ACCUSTOCK WITH ACCUFIT	FDE	PROOF RESEARCH CARBON FIBER WRAPPED STAINLESS STEEL	22	55,9	10	42.3	107,4	7.7	3,5	1.5-4 LBS
56234	BOLT	6.5 CREEDMOOR	10	ACCUSTOCK WITH ACCUFIT	FDE	PROOF RESEARCH CARBON FIBER WRAPPED STAINLESS STEEL	22	55,9	8	42.3	107,4	7.7	3,5	1.5-4 LBS
56235	BOLT	6.5 PRC	7	ACCUSTOCK WITH ACCUFIT	FDE	PROOF RESEARCH CARBON FIBER WRAPPED STAINLESS STEEL	24	61,0	8	44.3	112,5	8.0	3,6	1.5-4 LBS

110 ULTRALITE

PART #	ACTION	CALIBER	ROUND CPTY	STOCK	STOCK COLOR	BARREL	BARREL LENGTH IN / CM		TWIST RATE	OVERALL LENGTH IN / CM		WEIGHT LB / KG		ACCUTRIGGER ADJ.
56091	BOLT	308 WIN	4	ACCUFIT	GRAY	PROOF RESEARCH CARBON FIBER WRAPPED STAINLESS STEEL	22	55,9	10	42.3	107,4	5.8	2,6	1.5-4 LBS
56092	BOLT	6.5 CREEDMOOR	4	ACCUFIT	GRAY	PROOF RESEARCH CARBON FIBER WRAPPED STAINLESS STEEL	22	55,9	8	42.3	107,4	5.8	2,6	1.5-4 LBS
56096	BOLT	300 WSM	2	ACCUFIT	GRAY	PROOF RESEARCH CARBON FIBER WRAPPED STAINLESS STEEL	24	61,0	10	44.3	112,5	6.0	2,7	1.5-4 LBS
56097	BOLT	6.5 PRC	2	ACCUFIT	GRAY	PROOF RESEARCH CARBON FIBER WRAPPED STAINLESS STEEL	24	61,0	8	44.3	112,5	6.0	2,7	1.5-4 LBS
56093	BOLT	280 ACKLEY IMP	4	ACCUFIT	GRAY	PROOF RESEARCH CARBON FIBER WRAPPED STAINLESS STEEL	22	55,9	9	43.1	109,5	5.9	2,7	1.5-4 LBS
56094	BOLT	270 WIN	4	ACCUFIT	GRAY	PROOF RESEARCH CARBON FIBER WRAPPED STAINLESS STEEL	22	55,9	10	43.1	109,5	5.9	2,7	1.5-4 LBS
56095	BOLT	30-06 SPFLD	4	ACCUFIT	GRAY	PROOF RESEARCH CARBON FIBER WRAPPED STAINLESS STEEL	22	55,9	10	43.1	109,5	5.9	2,7	1.5-4 LBS
56098	BOLT	28 NOSLER	2	ACCUFIT	GRAY	PROOF RESEARCH CARBON FIBER WRAPPED STAINLESS STEEL	24	61,0	8.4	45.1	114,5	6.0	2,7	1.5-4 LBS
56236	BOLT	7MM PRC	2	ACCUFIT	GRAY	PROOF RESEARCH CARBON FIBER WRAPPED STAINLESS STEEL	22	55,9	8	43.1	109,5	6.0	2,7	1.5-4 LBS
LEFT HAND MODELS														
56161	BOLT	308 WIN	4	ACCUFIT	GRAY	PROOF RESEARCH CARBON FIBER WRAPPED STAINLESS STEEL	22	55,9	10	42.3	107,4	5.8	2,6	1.5-4 LBS
56162	BOLT	6.5 CREEDMOOR	4	ACCUFIT	GRAY	PROOF RESEARCH CARBON FIBER WRAPPED STAINLESS STEEL	22	55,9	8	42.3	107,4	5.8	2,6	1.5-4 LBS
56166	BOLT	300 WSM	2	ACCUFIT	GRAY	PROOF RESEARCH CARBON FIBER WRAPPED STAINLESS STEEL	24	61,0	10	44.3	112,5	6.0	2,7	1.5-4 LBS
56167	BOLT	6.5 PRC	2	ACCUFIT	GRAY	PROOF RESEARCH CARBON FIBER WRAPPED STAINLESS STEEL	24	61,0	8	44.3	112,5	6.0	2,7	1.5-4 LBS
56168	BOLT	280 ACKLEY IMP	4	ACCUFIT	GRAY	PROOF RESEARCH CARBON FIBER WRAPPED STAINLESS STEEL	22	55,9	9	43.1	109,5	5.9	2,7	1.5-4 LBS
56165	BOLT	270 WIN	4	ACCUFIT	GRAY	PROOF RESEARCH CARBON FIBER WRAPPED STAINLESS STEEL	22	55,9	10	43.1	109,5	5.9	2,7	1.5-4 LBS
56163	BOLT	30-06 SPFLD	4	ACCUFIT	GRAY	PROOF RESEARCH CARBON FIBER WRAPPED STAINLESS STEEL	22	55,9	10	43.1	109,5	5.9	2,7	1.5-4 LBS
56164	BOLT	28 NOSLER	2	ACCUFIT	GRAY	PROOF RESEARCH CARBON FIBER WRAPPED STAINLESS STEEL	24	61,0	8.4	45.1	114,5	6.0	2,7	1.5-4 LBS
56237	BOLT	7MM PRC	2	ACCUFIT	GRAY	PROOF RESEARCH CARBON FIBER WRAPPED STAINLESS STEEL	22	55,9	8	43.1	109,5	5.9	2,7	1.5-4 LBS

110 HIGH COUNTRY

PART #	ACTION	CALIBER	ROUND CPTY	STOCK	STOCK COLOR	BARREL	BARREL LENGTH IN / CM		TWIST RATE	OVERALL LENGTH IN / CM		WEIGHT LB / KG		ACCUTRIGGER ADJ.
55926	BOLT	308 WIN	4	ACCUSTOCK WITH ACCUFIT	TRUE TIMBER STRATA	MIDNIGHT BRONZE CERAKOTE, SPIRAL FLUTED	22	55,9	10	42.4	107,6	8.1	3,7	1.5-4 LBS
55927	BOLT	243 WIN	4	ACCUSTOCK WITH ACCUFIT	TRUE TIMBER STRATA	MIDNIGHT BRONZE CERAKOTE, SPIRAL FLUTED	22	55,9	9.3	42.4	107,6	8.1	3,7	1.5-4 LBS
55928	BOLT	6.5 CREEDMOOR	4	ACCUSTOCK WITH ACCUFIT	TRUE TIMBER STRATA	MIDNIGHT BRONZE CERAKOTE, SPIRAL FLUTED	22	55,9	8	42.4	107,6	8.1	3,7	1.5-4 LBS
55931	BOLT	7MM-08 REM	4	ACCUSTOCK WITH ACCUFIT	TRUE TIMBER STRATA	MIDNIGHT BRONZE CERAKOTE, SPIRAL FLUTED	22	55,9	9.5	42.4	107,6	8.1	3,7	1.5-4 LBS
55932	BOLT	300 WSM	2	ACCUSTOCK WITH ACCUFIT	TRUE TIMBER STRATA	MIDNIGHT BRONZE CERAKOTE, SPIRAL FLUTED	24	61,0	10	44.3	112,4	8.5	3,9	1.5-4 LBS
55935	BOLT	6.5 PRC	2	ACCUSTOCK WITH ACCUFIT	TRUE TIMBER STRATA	MIDNIGHT BRONZE CERAKOTE, SPIRAL FLUTED	24	61,0	8	45.3	114,9	8.5	3,9	1.5-4 LBS
55929	BOLT	270 WIN	4	ACCUSTOCK WITH ACCUFIT	TRUE TIMBER STRATA	MIDNIGHT BRONZE CERAKOTE, SPIRAL FLUTED	22	55,9	10	43.4	110,2	8.2	3,7	1.5-4 LBS
55930	BOLT	30-06 SPFLD	4	ACCUSTOCK WITH ACCUFIT	TRUE TIMBER STRATA	MIDNIGHT BRONZE CERAKOTE, SPIRAL FLUTED	22	55,9	10	43.4	110,2	8.2	3,7	1.5-4 LBS
55933	BOLT	280 ACKLEY IMP	4	ACCUSTOCK WITH ACCUFIT	TRUE TIMBER STRATA	MIDNIGHT BRONZE CERAKOTE, SPIRAL FLUTED	22	55,9	9	43.4	110,2	8.2	3,7	1.5-4 LBS
55934	BOLT	7MM REM MAG	3	ACCUSTOCK WITH ACCUFIT	TRUE TIMBER STRATA	MIDNIGHT BRONZE CERAKOTE, SPIRAL FLUTED	24	61,0	9.5	45.3	115,0	8.5	3,9	1.5-4 LBS
55936	BOLT	300 WIN MAG	3	ACCUSTOCK WITH ACCUFIT	TRUE TIMBER STRATA	MIDNIGHT BRONZE CERAKOTE, SPIRAL FLUTED	24	61,0	10	45.3	115,0	8.5	3,9	1.5-4 LBS
56239	BOLT	7MM PRC	2	ACCUSTOCK WITH ACCUFIT	TRUE TIMBER STRATA	MIDNIGHT BRONZE CERAKOTE, SPIRAL FLUTED	22	55,9	8.0	43.4	110,2	8.2	3,7	1.5-4 LBS

110 ULTRALITE CAMO

PART #	ACTION	CALIBER	ROUND CPTY	STOCK	STOCK COLOR	BARREL	BARREL LENGTH IN / CM		TWIST RATE	OVERALL LENGTH IN / CM		WEIGHT LB / KG		ACCUTRIGGER ADJ.
56277	BOLT	7MM PRC	2	ACCUFIT	SAVAGE WOODLAND CAMO	PROOF RESEARCH CARBON FIBER WRAPPED STAINLESS STEEL	22	55,9	8	43.1	109,5	5.9	2,7	1.5-4 LBS
56258	BOLT	308 WIN	4	ACCUFIT	SAVAGE WOODLAND CAMO	PROOF RESEARCH CARBON FIBER WRAPPED STAINLESS STEEL	22	55,9	10	42.3	107,4	5.8	2,6	1.5-4 LBS
56259	BOLT	6.5 CREEDMOOR	4	ACCUFIT	SAVAGE WOODLAND CAMO	PROOF RESEARCH CARBON FIBER WRAPPED STAINLESS STEEL	22	55,9	8	42.3	107,4	5.8	2,6	1.5-4 LBS
56261	BOLT	30-06 SPFLD	4	ACCUFIT	SAVAGE WOODLAND CAMO	PROOF RESEARCH CARBON FIBER WRAPPED STAINLESS STEEL	22	55,9	10	43.1	109,5	5.9	2,7	1.5-4 LBS
56260	BOLT	6.5 PRC	2	ACCUFIT	SAVAGE WOODLAND CAMO	PROOF RESEARCH CARBON FIBER WRAPPED STAINLESS STEEL	24	61,0	8	44.3	112,5	6.0	2,7	1.5-4 LBS
58019	BOLT	28 NOSLER	2	ACCUFIT	SAVAGE WOODLAND CAMO	PROOF RESEARCH CARBON FIBER WRAPPED STAINLESS STEEL	24	61,0	8.4	45.1	114,6	6.0	2,7	1.5-4 LBS

110 TIMBERLINE

PART #	ACTION	CALIBER	ROUND CPTY	STOCK	STOCK COLOR	BARREL	BARREL LENGTH IN / CM		TWIST RATE	OVERALL LENGTH IN / CM		WEIGHT LB / KG		ACCUTRIGGER ADJ.
56175	BOLT	6.5 CREEDMOOR	4	ACCUSTOCK WITH ACCUFIT	REAL TREE EXCAPE	OD GREEN CERAKOTE	22	55,9	8	43.8	111,3	8.1	3,7	1.5-4 LBS
56176	BOLT	308 WIN	4	ACCUSTOCK WITH ACCUFIT	REAL TREE EXCAPE	OD GREEN CERAKOTE	22	55,9	10	43.8	111,3	8.1	3,7	1.5-4 LBS
56177	BOLT	300 WSM	2	ACCUSTOCK WITH ACCUFIT	REAL TREE EXCAPE	OD GREEN CERAKOTE	24	61,0	10	45.8	116,3	8.5	3,9	1.5-4 LBS
56178	BOLT	243 WIN	4	ACCUSTOCK WITH ACCUFIT	REAL TREE EXCAPE	OD GREEN CERAKOTE	22	55,9	9.3	43.8	111,3	8.1	3,7	1.5-4 LBS
56179	BOLT	7MM-08 REM	4	ACCUSTOCK WITH ACCUFIT	REAL TREE EXCAPE	OD GREEN CERAKOTE	22	55,9	9.5	43.8	111,3	8.1	3,7	1.5-4 LBS
56180	BOLT	6.5 PRC	2	ACCUSTOCK WITH ACCUFIT	REAL TREE EXCAPE	OD GREEN CERAKOTE	24	61,0	8	45.8	116,3	8.5	3,9	1.5-4 LBS
56181	BOLT	300 WIN MAG	3	ACCUSTOCK WITH ACCUFIT	REAL TREE EXCAPE	OD GREEN CERAKOTE	24	61,0	10	46.6	118,4	8.5	3,9	1.5-4 LBS
56182	BOLT	30-06 SPFLD	4	ACCUSTOCK WITH ACCUFIT	REAL TREE EXCAPE	OD GREEN CERAKOTE	22	55,9	10	44.6	113,3	8.2	3,7	1.5-4 LBS
56183	BOLT	270 WIN	4	ACCUSTOCK WITH ACCUFIT	REAL TREE EXCAPE	OD GREEN CERAKOTE	22	55,9	10	44.6	113,3	8.2	3,7	1.5-4 LBS
56185	BOLT	280 ACKLEY IMP	4	ACCUSTOCK WITH ACCUFIT	REAL TREE EXCAPE	OD GREEN CERAKOTE	22	55,9	9	44.6	113,3	8.2	3,7	1.5-4 LBS
56186	BOLT	7MM REM MAG	3	ACCUSTOCK WITH ACCUFIT	REAL TREE EXCAPE	OD GREEN CERAKOTE	24	61,0	9.5	46.6	118,4	8.5	3,9	1.5-4 LBS
56240	BOLT	7MM PRC	2	ACCUSTOCK WITH ACCUFIT	REAL TREE EXCAPE	OD GREEN CERAKOTE	22	55,9	8	44.6	113,3	8.2	3,7	1.5-4 LBS
LEFT HAND MODELS														
56187	BOLT	6.5 CREEDMOOR	4	ACCUSTOCK WITH ACCUFIT	REAL TREE EXCAPE	OD GREEN CERAKOTE	22	55,9	8	43.8	111,3	8.1	3,7	1.5-4 LBS
56188	BOLT	308 WIN	4	ACCUSTOCK WITH ACCUFIT	REAL TREE EXCAPE	OD GREEN CERAKOTE	22	55,9	10	43.8	111,3	8.1	3,7	1.5-4 LBS
56189	BOLT	300 WSM	2	ACCUSTOCK WITH ACCUFIT	REAL TREE EXCAPE	OD GREEN CERAKOTE	24	61,0	10	45.8	116,3	8.5	3,9	1.5-4 LBS
56190	BOLT	243 WIN	4	ACCUSTOCK WITH ACCUFIT	REAL TREE EXCAPE	OD GREEN CERAKOTE	22	55,9	9.3	43.8	111,3	8.1	3,7	1.5-4 LBS
56191	BOLT	7MM-08 REM	4	ACCUSTOCK WITH ACCUFIT	REAL TREE EXCAPE	OD GREEN CERAKOTE	22	55,9	9.5	43.8	111,3	8.1	3,7	1.5-4 LBS
56192	BOLT	6.5 PRC	2	ACCUSTOCK WITH ACCUFIT	REAL TREE EXCAPE	OD GREEN CERAKOTE	24	61,0	8	45.8	116,3	8.5	3,9	1.5-4 LBS
56193	BOLT	300 WIN MAG	3	ACCUSTOCK WITH ACCUFIT	REAL TREE EXCAPE	OD GREEN CERAKOTE	24	61,0	10	46.6	118,4	8.8	4,0	1.5-4 LBS
56194	BOLT	30-06 SPFLD	4	ACCUSTOCK WITH ACCUFIT	REAL TREE EXCAPE	OD GREEN CERAKOTE	22	55,9	10	44.6	113,3	8.5	3,9	1.5-4 LBS
56195	BOLT	270 WIN	4	ACCUSTOCK WITH ACCUFIT	REAL TREE EXCAPE	OD GREEN CERAKOTE	22	55,9	10	44.6	113,3	8.5	3,9	1.5-4 LBS
56197	BOLT	280 ACKLEY IMP	4	ACCUSTOCK WITH ACCUFIT	REAL TREE EXCAPE	OD GREEN CERAKOTE	22	55,9	9	44.6	113,3	8.5	3,9	1.5-4 LBS
56198	BOLT	7MM REM MAG	3	ACCUSTOCK WITH ACCUFIT	REAL TREE EXCAPE	OD GREEN CERAKOTE	24	61,0	9.5	46.6	118,4	8.8	4,0	1.5-4 LBS
56241	BOLT	7MM PRC	2	ACCUSTOCK WITH ACCUFIT	REAL TREE EXCAPE	OD GREEN CERAKOTE	22	55,9	8	44.6	113,3	8.2	3,7	1.5-4 LBS

110 CLASSIC

PART #	ACTION	CALIBER	ROUND CPTY	STOCK	STOCK COLOR	BARREL	BARREL LENGTH IN / CM		TWIST RATE	OVERALL LENGTH IN / CM		WEIGHT LB / KG		ACCUTRIGGER ADJ.
55981	BOLT	243 WIN	4	ADJUSTABLE LOP AND COMB	WALNUT STOCK	CARBON STEEL MEDIUM CONTOUR, THREADED 9/16X24	22	55,9	9.3	41.3	104,9	8.1	3,7	1.5-4 LBS
55982	BOLT	308 WIN	4	ADJUSTABLE LOP AND COMB	WALNUT STOCK	CARBON STEEL MEDIUM CONTOUR, THREADED 9/16X24	22	55,9	10	41.3	104,9	8.1	3,7	1.5-4 LBS
55983	BOLT	6.5 CREEDMOOR	4	ADJUSTABLE LOP AND COMB	WALNUT STOCK	CARBON STEEL MEDIUM CONTOUR, THREADED 9/16X24	22	55,9	8	41.3	104,9	8.1	3,7	1.5-4 LBS
55984	BOLT	7MM-08 REM	4	ADJUSTABLE LOP AND COMB	WALNUT STOCK	CARBON STEEL MEDIUM CONTOUR, THREADED 9/16X24	22	55,9	9.5	41.3	104,9	8.1	3,7	1.5-4 LBS
55985	BOLT	270 WIN	4	ADJUSTABLE LOP AND COMB	WALNUT STOCK	CARBON STEEL MEDIUM CONTOUR, THREADED 9/16X24	22	55,9	10	42.1	106,9	8.2	3,7	1.5-4 LBS
55986	BOLT	30-06 SPFLD	4	ADJUSTABLE LOP AND COMB	WALNUT STOCK	CARBON STEEL MEDIUM CONTOUR, THREADED 9/16X24	22	55,9	10	42.1	106,9	8.2	3,7	1.5-4 LBS
55987	BOLT	7MM REM MAG	3	ADJUSTABLE LOP AND COMB	WALNUT STOCK	CARBON STEEL MEDIUM CONTOUR, THREADED 9/16X24	24	61,0	9.5	44.1	112,0	8.3	3,8	1.5-4 LBS
55988	BOLT	300 WIN MAG	3	ADJUSTABLE LOP AND COMB	WALNUT STOCK	CARBON STEEL MEDIUM CONTOUR, THREADED 9/16X24	24	61,0	10	44.1	112,0	8.3	3,8	1.5-4 LBS

110 HUNTER

PART #	ACTION	CALIBER	ROUND CPTY	STOCK	STOCK COLOR	BARREL	BARREL LENGTH IN / CM		TWIST RATE	OVERALL LENGTH IN / CM		WEIGHT LB / KG		ACCUTRIGGER ADJ.
55673	BOLT	204 RUGER	4	ACCUSTOCK WITH ACCUFIT	GRAY	MATTE BLACK CARBON STEEL	22	55,9	12	42.3	107,3	7.3	3,3	2.5-6 LBS
55672	BOLT	223 REM	4	ACCUSTOCK WITH ACCUFIT	GRAY	MATTE BLACK CARBON STEEL	22	55,9	9	42.3	107,3	7.3	3,3	2.5-6 LBS
55671	BOLT	22-250 REM	4	ACCUSTOCK WITH ACCUFIT	GRAY	MATTE BLACK CARBON STEEL	22	55,9	12	42.3	107,3	7.3	3,3	2.5-6 LBS
55674	BOLT	243 WIN	4	ACCUSTOCK WITH ACCUFIT	GRAY	MATTE BLACK CARBON STEEL	22	55,9	9.3	42.3	107,3	7.3	3,3	2.5-6 LBS
55675	BOLT	6.5 CREEDMOOR	4	ACCUSTOCK WITH ACCUFIT	GRAY	MATTE BLACK CARBON STEEL	24	61,0	8	44.3	112,5	7.6	3,4	2.5-6 LBS
55676	BOLT	7MM-08 REM	4	ACCUSTOCK WITH ACCUFIT	GRAY	MATTE BLACK CARBON STEEL	22	55,9	9.5	42.3	107,3	7.3	3,3	2.5-6 LBS
55649	BOLT	308 WIN	4	ACCUSTOCK WITH ACCUFIT	GRAY	MATTE BLACK CARBON STEEL	22	55,9	10	42.3	107,3	7.3	3,3	2.5-6 LBS
55650	BOLT	25-06 REM	4	ACCUSTOCK WITH ACCUFIT	GRAY	MATTE BLACK CARBON STEEL	22	55,9	10	43.1	109,5	7.5	3,4	2.5-6 LBS
55651	BOLT	270 WIN	4	ACCUSTOCK WITH ACCUFIT	GRAY	MATTE BLACK CARBON STEEL	22	55,9	10	43.1	109,5	7.5	3,4	2.5-6 LBS
57145	BOLT	30-06 SPFLD	4	ACCUSTOCK WITH ACCUFIT	GRAY	MATTE BLACK CARBON STEEL	22	55,9	10	43.1	109,5	7.5	3,4	2.5-6 LBS
55736	BOLT	280 ACKLEY IMP	4	ACCUSTOCK WITH ACCUFIT	GRAY	MATTE BLACK CARBON STEEL	22	55,9	9-5R	43.3	109,9	7.5	3,4	2.5-6 LBS
55652	BOLT	7MM REM MAG	3	ACCUSTOCK WITH ACCUFIT	GRAY	MATTE BLACK CARBON STEEL	24	61,0	9.5	45.1	114,6	7.6	3,4	2.5-6 LBS
55653	BOLT	300 WIN MAG	3	ACCUSTOCK WITH ACCUFIT	GRAY	MATTE BLACK CARBON STEEL	24	61,0	10	45.1	114,6	7.6	3,4	2.5-6 LBS

110 PREDATOR

PART #	ACTION	CALIBER	ROUND CPTY	STOCK	STOCK COLOR	BARREL	BARREL LENGTH IN / CM		TWIST RATE	OVERALL LENGTH IN / CM		WEIGHT LB / KG		ACCUTRIGGER ADJ.
55611	BOLT	22-250 REM	4	ACCUSTOCK WITH ACCUFIT	MOSSY OAK TERRA GILA	FLUTED CARBON STEEL MEDIUM BARREL	24	61,0	12	44.3	112,4	8.7	3,9	1.5-4 LBS
55612	BOLT	223 REM	4	ACCUSTOCK WITH ACCUFIT	MOSSY OAK TERRA GILA	FLUTED CARBON STEEL MEDIUM BARREL	22	55,9	9	42.3	107,3	8.3	3,8	1.5-4 LBS
55613	BOLT	204 RUGER	4	ACCUSTOCK WITH ACCUFIT	MOSSY OAK TERRA GILA	FLUTED CARBON STEEL MEDIUM BARREL	24	61,0	12	44.3	112,4	8.7	3,9	1.5-4 LBS
55614	BOLT	243 WIN	4	ACCUSTOCK WITH ACCUFIT	MOSSY OAK TERRA GILA	FLUTED CARBON STEEL MEDIUM BARREL	24	61,0	9.3	44.3	112,4	8.7	3,9	1.5-4 LBS
55615	BOLT	6.5 CREEDMOOR	4	ACCUSTOCK WITH ACCUFIT	MOSSY OAK TERRA GILA	FLUTED CARBON STEEL MEDIUM BARREL	24	61,0	8	44.3	112,4	8.7	3,9	1.5-4 LBS
55729	BOLT	308 WIN	4	ACCUSTOCK WITH ACCUFIT	MOSSY OAK TERRA GILA	FLUTED CARBON STEEL MEDIUM BARREL	24	61,0	10	44.3	112,4	8.7	3,9	1.5-4 LBS
55616	BOLT	260 REM	4	ACCUSTOCK WITH ACCUFIT	MOSSY OAK TERRA GILA	FLUTED CARBON STEEL MEDIUM BARREL	24	61,0	8	44.3	112,4	8.7	3,9	1.5-4 LBS

SAVAGE®

SPECIFICATIONS SUBJECT TO CHANGE WITHOUT NOTICE.

110 STORM

PART #	ACTION	CALIBER	ROUND CPTY	STOCK	STOCK COLOR	BARREL	BARREL LENGTH IN / CM		TWIST RATE	OVERALL LENGTH IN / CM		WEIGHT LB / KG		ACCUTRIGGER ADJ.
55688	BOLT	6.5 CREEDMOOR	4	ACCUSTOCK WITH ACCUFIT	GRAY	STAINLESS STEEL	22	55,9	8	42.3	107,4	7.4	3,4	2.5-6 LBS
55689	BOLT	308 WIN	4	ACCUSTOCK WITH ACCUFIT	GRAY	STAINLESS STEEL	22	55,9	10	42.3	107,4	7.4	3,4	2.5-6 LBS
55690	BOLT	270 WSM	2	ACCUSTOCK WITH ACCUFIT	GRAY	STAINLESS STEEL	24	61,0	10	44.3	112,5	7.7	3,5	2.5-6 LBS
55693	BOLT	243 WIN	4	ACCUSTOCK WITH ACCUFIT	GRAY	STAINLESS STEEL	22	55,9	9.3	42.3	107,4	7.4	3,4	2.5-6 LBS
55694	BOLT	7MM-08 REM	4	ACCUSTOCK WITH ACCUFIT	GRAY	STAINLESS STEEL	22	55,9	9.5	42.3	107,4	7.4	3,4	2.5-6 LBS
55695	BOLT	300 WSM	2	ACCUSTOCK WITH ACCUFIT	GRAY	STAINLESS STEEL	24	61,0	10	44.3	112,4	7.7	3,5	2.5-6 LBS
55660	BOLT	338 WIN MAG	3	ACCUSTOCK WITH ACCUFIT	GRAY	STAINLESS STEEL	24	61,0	10	45.1	114,6	7.7	3,5	2.5-6 LBS
55662	BOLT	6.5 X 284 NORMA	4	ACCUSTOCK WITH ACCUFIT	GRAY	STAINLESS STEEL	24	61,0	8	45.1	114,6	7.5	3,4	2.5-6 LBS
55663	BOLT	270 WIN	4	ACCUSTOCK WITH ACCUFIT	GRAY	STAINLESS STEEL	22	55,9	10	43.1	109,5	7.5	3,4	2.5-6 LBS
55664	BOLT	30-06 SPFLD	4	ACCUSTOCK WITH ACCUFIT	GRAY	STAINLESS STEEL	22	55,9	10	43.1	109,5	7.5	3,4	2.5-6 LBS
55665	BOLT	7MM REM MAG	3	ACCUSTOCK WITH ACCUFIT	GRAY	STAINLESS STEEL	24	61,0	9.5	45.1	114,6	7.5	3,4	2.5-6 LBS
55666	BOLT	300 WIN MAG	3	ACCUSTOCK WITH ACCUFIT	GRAY	STAINLESS STEEL	24	61,0	10	45.1	114,6	7.5	3,4	2.5-6 LBS
LEFT HAND MODELS														
55696	BOLT	223 REM	4	ACCUSTOCK WITH ACCUFIT	GRAY	STAINLESS STEEL	22	55,9	9	42.3	107,4	7.4	3,4	2.5-6 LBS
55697	BOLT	243 WIN	4	ACCUSTOCK WITH ACCUFIT	GRAY	STAINLESS STEEL	22	55,9	9.3	42.3	107,4	7.4	3,4	2.5-6 LBS
55788	BOLT	6.5 CREEDMOOR	4	ACCUSTOCK WITH ACCUFIT	GRAY	STAINLESS STEEL	22	55,9	8	42.3	107,4	7.4	3,4	2.5-6 LBS
55699	BOLT	7MM-08 REM	4	ACCUSTOCK WITH ACCUFIT	GRAY	STAINLESS STEEL	22	55,9	9.5	42.3	107,4	7.4	3,4	2.5-6 LBS
55700	BOLT	308 WIN	4	ACCUSTOCK WITH ACCUFIT	GRAY	STAINLESS STEEL	22	55,9	10	42.3	107,4	7.4	3,4	2.5-6 LBS
55667	BOLT	270 WIN	4	ACCUSTOCK WITH ACCUFIT	GRAY	STAINLESS STEEL	22	55,9	10	43.1	109,5	7.5	3,4	2.5-6 LBS
55668	BOLT	30-06 SPFLD	4	ACCUSTOCK WITH ACCUFIT	GRAY	STAINLESS STEEL	22	55,9	10	43.1	109,5	7.5	3,4	2.5-6 LBS
55669	BOLT	7MM REM MAG	3	ACCUSTOCK WITH ACCUFIT	GRAY	STAINLESS STEEL	24	61,0	9.5	45.1	114,6	7.5	3,4	2.5-6 LBS
55670	BOLT	300 WIN MAG	3	ACCUSTOCK WITH ACCUFIT	GRAY	STAINLESS STEEL	24	61,0	10	45.1	114,6	7.5	3,4	2.5-6 LBS

110 VARMINT

PART #	ACTION	CALIBER	ROUND CPTY	STOCK	STOCK COLOR	BARREL	BARREL LENGTH IN / CM		TWIST RATE	OVERALL LENGTH IN / CM		WEIGHT LB / KG		ACCUTRIGGER ADJ.
55677	BOLT	223 REM	4	ACCUSTOCK WITH ACCUFIT	GRAY	MATTE BLACK CARBON STEEL HEAVY BARREL	26	66,0	9	46.3	117,6	10.0	4,5	1.5-6 LBS
55678	BOLT	22-250 REM	4	ACCUSTOCK WITH ACCUFIT	GRAY	MATTE BLACK CARBON STEEL HEAVY BARREL	26	66,0	12	46.3	117,6	10.0	4,5	1.5-6 LBS
55679	BOLT	204 RUGER	4	ACCUSTOCK WITH ACCUFIT	GRAY	MATTE BLACK CARBON STEEL HEAVY BARREL	26	66,0	12	46.3	117,6	10.0	4,5	1.5-6 LBS

338 LAPUA / 300 PRC MUZZLE BRAKE

110 LONG RANGE HUNTER

PART #	ACTION	CALIBER	ROUND CPTY	STOCK	STOCK COLOR	BARREL	BARREL LENGTH IN / CM		TWIST RATE	OVERALL LENGTH IN / CM		WEIGHT LB / KG		ACCUTRIGGER ADJ.
55632	BOLT	6.5 CREEDMOOR	4	ACCUSTOCK WITH ACCUFIT	GRAY	MATTE BLACK CARBON STEEL	26	66,0	8	47.8	121.4	8.1	3,7	2.5-6 LBS
55634	BOLT	308 WIN	4	ACCUSTOCK WITH ACCUFIT	GRAY	MATTE BLACK CARBON STEEL	26	66,0	10	47.8	121.4	8.1	3,7	2.5-6 LBS
55635	BOLT	300 WSM	2	ACCUSTOCK WITH ACCUFIT	GRAY	MATTE BLACK CARBON STEEL	26	66,0	10	47.8	121.4	8.1	3,7	2.5-6 LBS
55645	BOLT	6.5 X 284 NORMA	3	ACCUSTOCK WITH ACCUFIT	GRAY	MATTE BLACK CARBON STEEL	26	66,0	8	48.6	123.4	8.4	3,8	2.5-6 LBS
57147	BOLT	280 ACKLEY IMP	4	ACCUSTOCK WITH ACCUFIT	GRAY	MATTE BLACK CARBON STEEL	26	66,0	9-5R	48.6	123.4	8.4	3,8	2.5-6 LBS
55646	BOLT	7MM REM MAG	3	ACCUSTOCK WITH ACCUFIT	GRAY	MATTE BLACK CARBON STEEL	26	66,0	9.5	48.6	123.4	8.4	3,8	2.5-6 LBS
55647	BOLT	300 WIN MAG	3	ACCUSTOCK WITH ACCUFIT	GRAY	MATTE BLACK CARBON STEEL	26	66,0	10	48.6	123.4	8.4	3,8	2.5-6 LBS
55997	BOLT	300 PRC	5	ACCUSTOCK WITH ACCUFIT	GRAY	MATTE BLACK CARBON STEEL	26	66,0	8.5	49.1	124.7	8.9	4,0	2.5-6 LBS
55648	BOLT	338 LAPUA	5	ACCUSTOCK WITH ACCUFIT	GRAY	MATTE BLACK CARBON STEEL	26	66,0	9	49.1	124.7	8.9	4,0	2.5-6 LBS

110 BEAR HUNTER

PART #	ACTION	CALIBER	ROUND CPTY	STOCK	STOCK COLOR	BARREL	BARREL LENGTH IN / CM		TWIST RATE	OVERALL LENGTH IN / CM		WEIGHT LB / KG		ACCUTRIGGER ADJ.
55680	BOLT	300 WSM	2	ACCUSTOCK WITH ACCUFIT	MOSSY OAK BREAK UP COUNTRY	STAINLESS STEEL MEDIUM CONTOUR BARREL WITH STRAIGHT FLUTING	23	58,4	10	44.8	113,8	7.5	3,4	2.5-6 LBS
55656	BOLT	300 WIN MAG	3	ACCUSTOCK WITH ACCUFIT	MOSSY OAK BREAK UP COUNTRY	STAINLESS STEEL MEDIUM CONTOUR BARREL WITH STRAIGHT FLUTING	23	58,4	10	45.6	115,8	8.4	3,8	2.5-6 LBS
55657	BOLT	338 WIN MAG	3	ACCUSTOCK WITH ACCUFIT	MOSSY OAK BREAK UP COUNTRY	STAINLESS STEEL MEDIUM CONTOUR BARREL WITH STRAIGHT FLUTING	23	58,4	10	45.6	115,8	8.4	3,8	2.5-6 LBS
55658	BOLT	375 RUGER	3	ACCUSTOCK WITH ACCUFIT	MOSSY OAK BREAK UP COUNTRY	STAINLESS STEEL MEDIUM CONTOUR BARREL WITH STRAIGHT FLUTING	23	58,4	12	45.6	115,8	8.4	3,8	2.5-6 LBS

110 HAYMAKER

PART #	ACTION	CALIBER	ROUND CPTY	STOCK	STOCK COLOR	BARREL	BARREL LENGTH IN / CM		TWIST RATE	OVERALL LENGTH IN / CM		WEIGHT LB / KG		ACCUTRIGGER ADJ.
55725	BOLT	450 BUSH-MASTER	4	ACCUSTOCK WITH ACCUFIT	GRAY	CARBON STEEL HEAVY BARREL	18	45,7	24	40.0	101,6	7.4	3,4	2.5-6 LBS

SAVAGE®

SPECIFICATIONS SUBJECT TO CHANGE WITHOUT NOTICE.

110 TACTICAL

PART #	ACTION	CALIBER	ROUND CPTY	STOCK	STOCK COLOR	BARREL	BARREL LENGTH IN / CM		TWIST RATE	OVERALL LENGTH IN / CM		WEIGHT LB / KG		ACCUTRIGGER ADJ.
55617	BOLT	308 WIN	10	ACCUSTOCK WITH ACCUFIT	GRAY	FLUTED CARBON STEEL MEDIUM BARREL	20	50,8	10	40.3	102,4	7.4	3,4	1.5-4 LBS
55618	BOLT	308 WIN	10	ACCUSTOCK WITH ACCUFIT	GRAY	FLUTED CARBON STEEL MEDIUM BARREL	24	61,0	10	44.3	112,5	8.9	4,0	1.5-4 LBS
55798	BOLT	6.5 CREEDMOOR	10	ACCUSTOCK WITH ACCUFIT	GRAY	FLUTED CARBON STEEL MEDIUM BARREL	24	61,0	8	44.3	112,5	8.9	4,0	1.5-4 LBS
56036	BOLT	6.5 PRC	7	ACCUSTOCK WITH ACCUFIT	GRAY	FLUTED CARBON STEEL MEDIUM BARREL	24	61,0	8	44.3	112,5	8.9	4,0	1.5-4 LBS
56035	BOLT	300 WIN MAG	5	ACCUSTOCK WITH ACCUFIT	GRAY	FLUTED CARBON STEEL MEDIUM BARREL	24	61,0	10	45.1	114,6	9.1	4,1	1.5-4 LBS
56204	BOLT	6MM ARC	10	ACCUSTOCK WITH ACCUFIT	GRAY	FLUTED CARBON STEEL MEDIUM BARREL	18	45,7	7.5	38.3	97,3	8.2	3,7	1.5-4 LBS
LEFT HAND MODELS														
55620	BOLT	308 WIN	10	ACCUSTOCK WITH ACCUFIT	GRAY	FLUTED CARBON STEEL MEDIUM BARREL	24	61,0	10	44.3	112,5	8.9	4,0	1.5-4 LBS
55989	BOLT	6.5 CREEDMOOR	10	ACCUSTOCK WITH ACCUFIT	GRAY	FLUTED CARBON STEEL MEDIUM BARREL	24	61,0	8	44.3	112,5	8.9	4,0	1.5-4 LBS

110 TACTICAL DESERT

PART #	ACTION	CALIBER	ROUND CPTY	STOCK	STOCK COLOR	BARREL	BARREL LENGTH IN / CM		TWIST RATE	OVERALL LENGTH IN / CM		WEIGHT LB / KG		ACCUTRIGGER ADJ.
55619	BOLT	6.5 CREEDMOOR	10	ACCUSTOCK WITH ACCUFIT	FDE	MATTE BLACK CARBON STEEL MEDIUM BARREL	24	61,0	8	44.3	112,5	8.9	4,0	1.5-4 LBS
55721	BOLT	6MM CREEDMOOR	10	ACCUSTOCK WITH ACCUFIT	FDE	MATTE BLACK CARBON STEEL MEDIUM BARREL	26	66,0	7.5	46.3	117,6	9.3	4,2	1.5-4 LBS
56038	BOLT	6.5 PRC	7	ACCUSTOCK WITH ACCUFIT	FDE	MATTE BLACK CARBON STEEL MEDIUM BARREL	24	61,0	8	44.3	112,5	8.9	4,0	1.5-4 LBS
56037	BOLT	300 WIN MAG	5	ACCUSTOCK WITH ACCUFIT	FDE	MATTE BLACK CARBON STEEL MEDIUM BARREL	24	61,0	10	45.1	114,6	9.3	4,2	1.5-4 LBS
LEFT HAND MODELS														
56049	BOLT	6.5 CREEDMOOR	10	ACCUSTOCK WITH ACCUFIT	FDE	MATTE BLACK CARBON STEEL MEDIUM BARREL	24	61,0	8	44.3	112,5	8.9	4,0	1.5-4 LBS

2025

MODEL 110 TROPHY

110 Trophy rifles are available in a variety or finishes and feature packages. There is a 110 Trophy for any application. Delivering a custom fit, adjustable trigger weight and repeatable accuracy. Button rifled barrels deliver lasting accuracy and certain models feature mounted and BORE-sighted optics, right from the factory.

- Redesigned Model 110 rifle
- Scope, mounted and BORE-sighted *(select models)*
- Vortex Crossfire optic
- Vortex Hunter medium rings and one-piece EGW 0 MOA rail
- User-adjustable AccuTrigger™
- Adjustable lop *(excluding Trail Hunter models)*
- Modern ergonomics
- Detachable box magazine
- Vortex scope *(XP models)*

SAVAGE®

SPECIFICATIONS SUBJECT TO CHANGE WITHOUT NOTICE.

MODEL 110 TROPHY

24 CALIBERS // 10 MODELS

- 204 REM
- 223 REM
- 5.56X45 NATO
- 22-250 REM
- 243 WIN
- 25-06 REM
- 6MM CREEDMOOR
- 260 REM
- 6.5 CREEDMOOR
- 6.5 X 284 NORMA
- 6.5 PRC
- 270 WIN
- 270 WSM
- 7MM-08 REM
- 7MM REM MAG
- 7MM PRC
- 308 WIN
- 30-06 SPFLD
- 300 WSM
- 300 WIN MAG
- 338 WIN MAG
- 350 LEGEND
- 375 RUGER
- 400 LEGEND
- 450 BUSHMASTER

VORTEX SCOPE
(select models)

// 110 LIGHTWEIGHT STORM

2025

MODEL 110 TROPHY

NEW//// 110 TRAIL HUNTER LITE

PART #	ACTION	CALIBER	ROUND CPTY	STOCK	STOCK COLOR	BARREL	BARREL LENGTH IN / CM		TWIST RATE	OVERALL LENGTH IN / CM		WEIGHT LB / KG		ACCUTRIGGER ADJ.
56375	BOLT	5.56 / 223 REM	4	HOGUE OVERMOLDED	BLACK	CARBON STEEL HEAVY SPORTER STRAIGHT FLUTED - TUNGSTEN CERAKOTE	20	50.8	7	40.3	102,4	6.9	3,1	2.5-6 LBS
56376	BOLT	243 WIN	4	HOGUE OVERMOLDED	BLACK	CARBON STEEL HEAVY SPORTER STRAIGHT FLUTED - TUNGSTEN CERAKOTE	20	50.8	9.25	40.3	102,4	6.9	3,1	2.5-6 LBS
56377	BOLT	6.5 CREEDMOOR	4	HOGUE OVERMOLDED	BLACK	CARBON STEEL HEAVY SPORTER STRAIGHT FLUTED - TUNGSTEN CERAKOTE	20	50.8	8	40.3	102,4	6.9	3,1	2.5-6 LBS
56378	BOLT	7MM-08	4	HOGUE OVERMOLDED	BLACK	CARBON STEEL HEAVY SPORTER STRAIGHT FLUTED - TUNGSTEN CERAKOTE	20	50.8	11.5	40.3	102,4	6.9	3,1	2.5-6 LBS
56379	BOLT	308 WINCHESTER	4	HOGUE OVERMOLDED	BLACK	CARBON STEEL HEAVY SPORTER STRAIGHT FLUTED - TUNGSTEN CERAKOTE	20	50.8	10	40.3	102,4	6.9	3,1	2.5-6 LBS
56380	BOLT	350 LEGEND	4	HOGUE OVERMOLDED	BLACK	CARBON STEEL HEAVY SPORTER STRAIGHT FLUTED - TUNGSTEN CERAKOTE	18	45.7	16	38.3	97,3	6.8	3,1	2.5-6 LBS
56381	BOLT	400 LEGEND	4	HOGUE OVERMOLDED	BLACK	CARBON STEEL HEAVY SPORTER STRAIGHT FLUTED - TUNGSTEN CERAKOTE	20	50.8	16	40.3	102,4	7.4	3,4	2.5-6 LBS
56382	BOLT	270 WIN	4	HOGUE OVERMOLDED	BLACK	CARBON STEEL HEAVY SPORTER STRAIGHT FLUTED - TUNGSTEN CERAKOTE	20	50.8	10	41.1	104,4	7.0	3,2	2.5-6 LBS
56383	BOLT	30-06 SPRINGFIELD	4	HOGUE OVERMOLDED	BLACK	CARBON STEEL HEAVY SPORTER STRAIGHT FLUTED - TUNGSTEN CERAKOTE	20	50.8	10	41.1	104,4	7.0	3,2	2.5-6 LBS
56384	BOLT	6.5 PRC	2	HOGUE OVERMOLDED	BLACK	CARBON STEEL HEAVY SPORTER STRAIGHT FLUTED - TUNGSTEN CERAKOTE	20	50.8	8	40.3	102,4	6.9	3,1	2.5-6 LBS
56385	BOLT	300 WSM	2	HOGUE OVERMOLDED	BLACK	CARBON STEEL HEAVY SPORTER STRAIGHT FLUTED - TUNGSTEN CERAKOTE	20	50.8	10	40.3	102,4	6.9	3,1	2.5-6 LBS
56386	BOLT	7MM REM MAG	3	HOGUE OVERMOLDED	BLACK	CARBON STEEL HEAVY SPORTER STRAIGHT FLUTED - TUNGSTEN CERAKOTE	20	50.8	9.5	41.1	104,4	7.0	3,2	2.5-6 LBS
56387	BOLT	7MM PRC	2	HOGUE OVERMOLDED	BLACK	CARBON STEEL HEAVY SPORTER STRAIGHT FLUTED - TUNGSTEN CERAKOTE	20	50.8	8	41.1	104,4	7.0	3,2	2.5-6 LBS
56388	BOLT	300 WIN MAG	3	HOGUE OVERMOLDED	BLACK	CARBON STEEL HEAVY SPORTER STRAIGHT FLUTED - TUNGSTEN CERAKOTE	20	50.8	10	41.1	104,4	7.0	3,2	2.5-6 LBS
56389	BOLT	450 BUSHMASTER	3	HOGUE OVERMOLDED	BLACK	CARBON STEEL HEAVY SPORTER STRAIGHT FLUTED	20	50.8	24	40.3	102,4	7.6	3,5	2.5-6 LBS

SPECIFICATIONS SUBJECT TO CHANGE WITHOUT NOTICE.

110 TRAIL HUNTER

PART #	ACTION	CALIBER	ROUND CPTY	STOCK	STOCK COLOR	BARREL	BARREL LENGTH IN / CM		TWIST RATE	OVERALL LENGTH IN / CM		WEIGHT LB / KG		ACCUTRIGGER ADJ.
56278	BOLT	223 REM	4	HOGUE OVERMOLDED	OD GREEN	CARBON STEEL MEDIUM HEAVY - TUNGSTEN CERAKOTE	22	55,9	9	42.5	108,0	8.0	3,6	2.5-6 LBS
56279	BOLT	243 WIN	4	HOGUE OVERMOLDED	OD GREEN	CARBON STEEL MEDIUM HEAVY - TUNGSTEN CERAKOTE	22	55,9	9	42.5	108,0	8.0	3,6	2.5-6 LBS
56280	BOLT	6.5 CREEDMOOR	4	HOGUE OVERMOLDED	OD GREEN	CARBON STEEL MEDIUM HEAVY - TUNGSTEN CERAKOTE	22	55,9	8	42.5	108,0	8.0	3,6	2.5-6 LBS
56281	BOLT	7MM-08 REM	4	HOGUE OVERMOLDED	OD GREEN	CARBON STEEL MEDIUM HEAVY - TUNGSTEN CERAKOTE	22	55,9	12	42.5	108,0	8.0	3,6	2.5-6 LBS
56282	BOLT	308 WIN	4	HOGUE OVERMOLDED	OD GREEN	CARBON STEEL MEDIUM HEAVY - TUNGSTEN CERAKOTE	22	55,9	10	42.5	108,0	8.0	3,6	2.5-6 LBS
56283	BOLT	350 LEGEND	4	HOGUE OVERMOLDED	OD GREEN	CARBON STEEL MEDIUM HEAVY - TUNGSTEN CERAKOTE	18	45,7	16	38.5	97,8	7.6	3,5	2.5-6 LBS
56284	BOLT	400 LEGEND	4	HOGUE OVERMOLDED	OD GREEN	CARBON STEEL MEDIUM HEAVY - TUNGSTEN CERAKOTE	20	50,8	16	40.5	102,9	7.8	3,5	2.5-6 LBS
56285	BOLT	270 WIN	4	HOGUE OVERMOLDED	OD GREEN	CARBON STEEL MEDIUM HEAVY - TUNGSTEN CERAKOTE	22	55,9	10	43.4	110,2	8.2	3,7	2.5-6 LBS
56286	BOLT	30-06 SPFLD	4	HOGUE OVERMOLDED	OD GREEN	CARBON STEEL MEDIUM HEAVY - TUNGSTEN CERAKOTE	22	55,9	10	43.4	110,2	8.2	3,7	2.5-6 LBS
56287	BOLT	6.5 PRC	2	HOGUE OVERMOLDED	OD GREEN	CARBON STEEL MEDIUM HEAVY - TUNGSTEN CERAKOTE	24	61,0	8	44.5	113,0	8.2	3,7	2.5-6 LBS
56288	BOLT	300 WSM	2	HOGUE OVERMOLDED	OD GREEN	CARBON STEEL MEDIUM HEAVY - TUNGSTEN CERAKOTE	24	61,0	10	44.5	113,0	8.2	3,7	2.5-6 LBS
56289	BOLT	7MM REM MAG	3	HOGUE OVERMOLDED	OD GREEN	CARBON STEEL MEDIUM HEAVY - TUNGSTEN CERAKOTE	24	61,0	10	45.4	115,3	8.4	3,8	2.5-6 LBS
56290	BOLT	7MM PRC	2	HOGUE OVERMOLDED	OD GREEN	CARBON STEEL MEDIUM HEAVY - TUNGSTEN CERAKOTE	22	55,9	8	43.4	110,2	8.2	3,7	2.5-6 LBS
56291	BOLT	300 WIN MAG	3	HOGUE OVERMOLDED	OD GREEN	CARBON STEEL MEDIUM HEAVY - TUNGSTEN CERAKOTE	24	61,0	10	45.4	115,3	8.4	3,8	2.5-6 LBS
56312	BOLT	450 BUSHMASTER	3	HOGUE OVERMOLDED	OD GREEN	CARBON STEEL MEDIUM HEAVY - TUNGSTEN CERAKOTE	20	50,8	24	40.5	102,9	7.8	3,5	2.5-6 LBS

110 APEX HUNTER XP MUDDY GIRL

PART #	ACTION	CALIBER	ROUND CPTY	STOCK	STOCK COLOR	BARREL	BARREL LENGTH IN / CM		TWIST RATE	OVERALL LENGTH IN / CM		WEIGHT LB / KG		ACCUTRIGGER ADJ.
55895	BOLT	243 WIN	4	ADJUSTABLE LOP	MUDDY GIRL	MATTE BLACK CARBON STEEL	22	55,9	9.25	42.3	107,3	7.7	3,5	2.5-6 LBS
55896	BOLT	6.5 CREEDMOOR	4	ADJUSTABLE LOP	MUDDY GIRL	MATTE BLACK CARBON STEEL	24	61,0	8	44.3	112,4	8.0	3,6	2.5-6 LBS
55897	BOLT	7MM-08 REM	4	ADJUSTABLE LOP	MUDDY GIRL	MATTE BLACK CARBON STEEL	20	50,8	9.5	40.3	102,2	7.7	3,5	2.5-6 LBS
55898	BOLT	308 WIN	4	ADJUSTABLE LOP	MUDDY GIRL	MATTE BLACK CARBON STEEL	20	50,8	10	40.3	102,2	7.7	3,5	2.5-6 LBS

110 APEX HUNTER XP

PART #	ACTION	CALIBER	ROUND CPTY	STOCK	STOCK COLOR	BARREL	BARREL LENGTH IN / CM		TWIST RATE	OVERALL LENGTH IN / CM		WEIGHT LB / KG		ACCUTRIGGER ADJ.
55859	BOLT	223 REM	4	ADJUSTABLE LOP	BLACK	MATTE BLACK CARBON STEEL	20	50,8	9	40.3	102,2	7.7	3,5	2.5-6 LBS
55860	BOLT	204 RUGER	4	ADJUSTABLE LOP	BLACK	MATTE BLACK CARBON STEEL	20	50,8	12	40.3	102,2	7.7	3,5	2.5-6 LBS
55861	BOLT	22-250 REM	4	ADJUSTABLE LOP	BLACK	MATTE BLACK CARBON STEEL	20	50,8	12	40.3	102,2	7.7	3,5	2.5-6 LBS
55862	BOLT	243 WIN	4	ADJUSTABLE LOP	BLACK	MATTE BLACK CARBON STEEL	22	55,9	9.25	42.3	107,3	7.7	3,5	2.5-6 LBS
55863	BOLT	6.5 CREEDMOOR	4	ADJUSTABLE LOP	BLACK	MATTE BLACK CARBON STEEL	24	61,0	8	44.3	112,4	8.0	3,6	2.5-6 LBS
55864	BOLT	7MM-08 REM	4	ADJUSTABLE LOP	BLACK	MATTE BLACK CARBON STEEL	20	50,8	9.5	40.3	102,2	7.7	3,5	2.5-6 LBS
55865	BOLT	260 REM	4	ADJUSTABLE LOP	BLACK	MATTE BLACK CARBON STEEL	24	61,0	8	44.3	112,4	8.0	3,6	2.5-6 LBS
55866	BOLT	308 WIN	4	ADJUSTABLE LOP	BLACK	MATTE BLACK CARBON STEEL	20	50,8	10	40.3	102,2	7.7	3,5	2.5-6 LBS
55867	BOLT	270 WSM	2	ADJUSTABLE LOP	BLACK	MATTE BLACK CARBON STEEL	24	61,0	10	44.3	112,4	8.0	3,6	2.5-6 LBS
55868	BOLT	300 WSM	2	ADJUSTABLE LOP	BLACK	MATTE BLACK CARBON STEEL	24	61,0	10	44.3	112,4	8.0	3,6	2.5-6 LBS
55868	BOLT	30-06 SPFLD	4	ADJUSTABLE LOP	BLACK	MATTE BLACK CARBON STEEL	22	55,9	10	43.0	109,2	7.8	3,6	2.5-6 LBS
57535	BOLT	350 LEGEND	4	ADJUSTABLE LOP	BLACK	MATTE BLACK CARBON STEEL	18	45,7	16	38.3	97,2	7.4	3,4	2.5-6 LBS
56109	BOLT	6.5 PRC	2	ADJUSTABLE LOP	BLACK	MATTE BLACK CARBON STEEL	24	61,0	8	44.3	112,4	8.0	3,6	2.5-6 LBS
56061	BOLT	450 BUSHMASTER	3	ADJUSTABLE LOP	BLACK	MATTE BLACK CARBON STEEL	22	55,9	24	43.1	109,5	8.0	3,6	2.5-6 LBS
55869	BOLT	25-06 REM	4	ADJUSTABLE LOP	BLACK	MATTE BLACK CARBON STEEL	24	61,0	10	45.0	114,3	8.1	3,7	2.5-6 LBS
55870	BOLT	6.5 X 284 NORMA	3	ADJUSTABLE LOP	BLACK	MATTE BLACK CARBON STEEL	24	61,0	8	45.0	114,3	8.1	3,7	2.5-6 LBS
55871	BOLT	270 WIN	4	ADJUSTABLE LOP	BLACK	MATTE BLACK CARBON STEEL	22	55,9	10	43.0	109,2	7.8	3,6	2.5-6 LBS
55868	BOLT	30-06 SPFLD	4	ADJUSTABLE LOP	BLACK	MATTE BLACK CARBON STEEL	22	55,9	10	43.0	109,2	7.8	3,6	2.5-6 LBS
55873	BOLT	7MM REM MAG	3	ADJUSTABLE LOP	BLACK	MATTE BLACK CARBON STEEL	24	61,0	9.5	45.0	114,3	8.1	3,7	2.5-6 LBS
55874	BOLT	300 WIN MAG	3	ADJUSTABLE LOP	BLACK	MATTE BLACK CARBON STEEL	24	61,0	10	45.0	114,3	8.1	3,7	2.5-6 LBS
55875	BOLT	338 WIN MAG	3	ADJUSTABLE LOP	BLACK	MATTE BLACK CARBON STEEL	24	61,0	10	45.0	114,3	8.1	3,7	2.5-6 LBS
56245	BOLT	7MM PRC	2	ADJUSTABLE LOP	BLACK	MATTE BLACK CARBON STEEL	22	55,9	8	43.0	109,2	7.8	3,5	2.5-6 LBS
58130	BOLT	400 LEGEND	4	ADJUSTABLE LOP	BLACK	MATTE BLACK CARBON STEEL	20	45,7	16	40.3	102,2	7.6	3,4	2.5-6 LBS
LEFT HAND MODELS														
55876	BOLT	223 REM	4	ADJUSTABLE LOP	BLACK	MATTE BLACK CARBON STEEL	20	50,8	9	40.3	102,2	7.7	3,5	2.5-6 LBS
55877	BOLT	22-250 REM	4	ADJUSTABLE LOP	BLACK	MATTE BLACK CARBON STEEL	20	50,8	12	40.3	102,2	7.7	3,5	2.5-6 LBS
55878	BOLT	243 WIN	4	ADJUSTABLE LOP	BLACK	MATTE BLACK CARBON STEEL	22	55,9	9.25	42.3	107,3	7.7	3,5	2.5-6 LBS
55879	BOLT	6.5 CREEDMOOR	4	ADJUSTABLE LOP	BLACK	MATTE BLACK CARBON STEEL	24	61,0	8	44.3	112,4	8.0	3,6	2.5-6 LBS
55880	BOLT	7MM-08 REM	4	ADJUSTABLE LOP	BLACK	MATTE BLACK CARBON STEEL	20	50,8	9.5	40.3	102,2	7.7	3,5	2.5-6 LBS
55881	BOLT	308 WIN	4	ADJUSTABLE LOP	BLACK	MATTE BLACK CARBON STEEL	20	50,8	10	40.3	102,2	7.7	3,5	2.5-6 LBS
57536	BOLT	350 LEGEND	4	ADJUSTABLE LOP	BLACK	MATTE BLACK CARBON STEEL	18	45,7	16	38.3	97,2	7.4	3,4	2.5-6 LBS
55882	BOLT	25-06 REM	4	ADJUSTABLE LOP	BLACK	MATTE BLACK CARBON STEEL	24	61,0	10	45.0	114,3	8.1	3,7	2.5-6 LBS
55883	BOLT	270 WIN	4	ADJUSTABLE LOP	BLACK	MATTE BLACK CARBON STEEL	22	55,9	10	43.0	109,2	7.8	3,6	2.5-6 LBS
55884	BOLT	30-06 SPFLD	4	ADJUSTABLE LOP	BLACK	MATTE BLACK CARBON STEEL	22	55,9	10	43.0	109,2	7.8	3,6	2.5-6 LBS
55885	BOLT	7MM REM MAG	3	ADJUSTABLE LOP	BLACK	MATTE BLACK CARBON STEEL	24	61,0	9.5	45.0	114,3	8.1	3,7	2.5-6 LBS
55886	BOLT	300 WIN MAG	3	ADJUSTABLE LOP	BLACK	MATTE BLACK CARBON STEEL	24	61,0	10	45.0	114,3	8.1	3,7	2.5-6 LBS
56247	BOLT	7MM PRC	2	ADJUSTABLE LOP	BLACK	MATTE BLACK CARBON STEEL	22	55,9	8	43.0	109,2	7.8	3,5	2.5-6 LBS
58131	BOLT	400 LEGEND	4	ADJUSTABLE LOP	BLACK	MATTE BLACK CARBON STEEL	20	45,7	16	40.3	102,2	7.6	3,4	2.5-6 LBS

110 APEX STORM XP

PART #	ACTION	CALIBER	ROUND CPTY	STOCK	STOCK COLOR	BARREL	BARREL LENGTH IN / CM		TWIST RATE	OVERALL LENGTH IN / CM		WEIGHT LB / KG		ACCUTRIGGER ADJ.
55899	BOLT	223 REM	4	ADJUSTABLE LOP	BLACK	STAINLESS STEEL	20	50,8	9	40.3	102,2	7.7	3,5	2.5-6 LBS
55900	BOLT	204 RUGER	4	ADJUSTABLE LOP	BLACK	STAINLESS STEEL	20	50,8	12	40.3	102,2	7.7	3,5	2.5-6 LBS
55902	BOLT	22-250 REM	4	ADJUSTABLE LOP	BLACK	STAINLESS STEEL	20	50,8	12	40.3	102,2	7.7	3,5	2.5-6 LBS
55903	BOLT	243 WIN	4	ADJUSTABLE LOP	BLACK	STAINLESS STEEL	22	55,9	9.3	42.3	107,3	7.7	3,5	2.5-6 LBS
55904	BOLT	6.5 CREEDMOOR	4	ADJUSTABLE LOP	BLACK	STAINLESS STEEL	24	61,0	8	44.3	112,4	8.0	3,6	2.5-6 LBS
55905	BOLT	7MM-08 REM	4	ADJUSTABLE LOP	BLACK	STAINLESS STEEL	20	50,8	9.5	40.3	102,2	7.7	3,5	2.5-6 LBS
55906	BOLT	260 REM	4	ADJUSTABLE LOP	BLACK	STAINLESS STEEL	24	61,0	8	44.3	112,4	8.0	3,6	2.5-6 LBS
55907	BOLT	308 WIN	4	ADJUSTABLE LOP	BLACK	STAINLESS STEEL	20	50,8	10	40.3	102,2	7.7	3,5	2.5-6 LBS
55908	BOLT	270 WSM	2	ADJUSTABLE LOP	BLACK	STAINLESS STEEL	24	61,0	10	44.3	112,4	8.0	3,6	2.5-6 LBS
55909	BOLT	300 WSM	2	ADJUSTABLE LOP	BLACK	STAINLESS STEEL	24	61,0	10	44.3	112,4	8.0	3,6	2.5-6 LBS
57537	BOLT	350 LEGEND	4	ADJUSTABLE LOP	BLACK	STAINLESS STEEL	18	45,7	16	38.3	97,2	7.4	3,4	2.5-6 LBS
56110	BOLT	6.5 PRC	2	ADJUSTABLE LOP	BLACK	STAINLESS STEEL	24	61,0	8	44.3	112,4	8.0	3,6	2.5-6 LBS
55910	BOLT	25-06 REM	4	ADJUSTABLE LOP	BLACK	STAINLESS STEEL	24	61,0	10	45.0	114,3	8.1	3,7	2.5-6 LBS
55911	BOLT	270 WIN	4	ADJUSTABLE LOP	BLACK	STAINLESS STEEL	22	55,9	10	43.0	109,2	7.9	3,6	2.5-6 LBS
55912	BOLT	30-06 SPFLD	4	ADJUSTABLE LOP	BLACK	STAINLESS STEEL	22	55,9	10	43.0	109,2	7.9	3,6	2.5-6 LBS
55913	BOLT	7MM REM MAG	3	ADJUSTABLE LOP	BLACK	STAINLESS STEEL	24	61,0	9.5	45.0	114,3	8.1	3,7	2.5-6 LBS
55914	BOLT	300 WIN MAG	3	ADJUSTABLE LOP	BLACK	STAINLESS STEEL	24	61,0	10	45.0	114,3	8.1	3,7	2.5-6 LBS
55916	BOLT	338 WIN MAG	3	ADJUSTABLE LOP	BLACK	STAINLESS STEEL	24	61,0	10	45.0	114,3	8.1	3,7	2.5-6 LBS
56246	BOLT	7MM PRC	2	ADJUSTABLE LOP	BLACK	STAINLESS STEEL	22	55,9	8	43.0	109,2	7.9	3,6	2.5-6 LBS
58132	BOLT	400 LEGEND	3	ADJUSTABLE LOP	BLACK	STAINLESS STEEL	18	45,7	16	40.3	102,2	7.6	3,4	2.5-6 LBS

110 APEX PREDATOR XP

PART #	ACTION	CALIBER	ROUND CPTY	STOCK	STOCK COLOR	BARREL	BARREL LENGTH IN / CM		TWIST RATE	OVERALL LENGTH IN / CM		WEIGHT LB / KG		ACCUTRIGGER ADJ.
55917	BOLT	223 REM	4	ADJUSTABLE LOP	MOSSY OAK TERRA	FLUTED CARBON STEEL MEDIUM BARREL	20	50,8	9	40.3	102,4	8.4	3,8	1.5-6 LBS
55918	BOLT	22-250 REM	4	ADJUSTABLE LOP	MOSSY OAK TERRA	FLUTED CARBON STEEL MEDIUM BARREL	20	50,8	12	40.3	102,4	8.4	3,8	1.5-6 LBS
55919	BOLT	204 RUGER	4	ADJUSTABLE LOP	MOSSY OAK TERRA	FLUTED CARBON STEEL MEDIUM BARREL	20	50,8	12	40.3	102,4	8.4	3,8	1.5-6 LBS
55920	BOLT	243 WIN	4	ADJUSTABLE LOP	MOSSY OAK TERRA	FLUTED CARBON STEEL MEDIUM BARREL	24	61,0	9.3	44.3	112,5	9.9	4,5	1.5-6 LBS
55921	BOLT	6.5 CREEDMOOR	4	ADJUSTABLE LOP	MOSSY OAK TERRA	FLUTED CARBON STEEL MEDIUM BARREL	24	61,0	8	44.3	112,5	9.9	4,5	1.5-6 LBS
55922	BOLT	308 WIN	4	ADJUSTABLE LOP	MOSSY OAK TERRA	FLUTED CARBON STEEL MEDIUM BARREL	20	50,8	10	40.3	102,4	8.4	3,8	1.5-6 LBS

110 HOG HUNTER

PART #	ACTION	CALIBER	ROUND CPTY	STOCK	STOCK COLOR	BARREL	BARREL LENGTH IN / CM		TWIST RATE	OVERALL LENGTH IN / CM		WEIGHT LB / KG		ACCUTRIGGER ADJ.
55629	BOLT	223 REM	4	ADJUSTABLE LOP	OD GREEN	MATTE BLACK CARBON STEEL MEDIUM BARREL	20	50,8	9	40.3	102,4	7.3	3,3	2.5-6 LBS
55630	BOLT	308 WIN	4	ADJUSTABLE LOP	OD GREEN	MATTE BLACK CARBON STEEL MEDIUM BARREL	20	50,8	10	40.3	102,4	7.3	3,3	2.5-6 LBS
57534	BOLT	350 LEGEND	4	ADJUSTABLE LOP	OD GREEN	MATTE BLACK CARBON STEEL MEDIUM BARREL	18	45,7	16	38.3	96,8	7.1	3,2	2.5-6 LBS
58133	BOLT	400 LEGEND	4	ADJUSTABLE LOP	OD GREEN	MATTE BLACK CARBON STEEL MEDIUM BARREL	20	45,7	16	40.3	102,4	7.1	3,2	2.5-6 LBS

110 BRUSH HUNTER

PART #	ACTION	CALIBER	ROUND CPTY	STOCK	STOCK COLOR	BARREL	BARREL LENGTH IN / CM		TWIST RATE	OVERALL LENGTH IN / CM		WEIGHT LB / KG		ACCUTRIGGER ADJ.
55654	BOLT	338 WIN MAG	3	ADJUSTABLE LOP	BLACK	STAINLESS STEEL MEDIUM BARREL	20	50,8	10	41	104,1	7.4	3,4	2.5-6 LBS
55655	BOLT	375 RUGER	3	ADJUSTABLE LOP	BLACK	STAINLESS STEEL MEDIUM BARREL	20	50,8	12	41	104,1	7.4	3,4	2.5-6 LBS

110 LIGHTWEIGHT STORM

PART #	ACTION	CALIBER	ROUND CPTY	STOCK	STOCK COLOR	BARREL	BARREL LENGTH IN / CM		TWIST RATE	OVERALL LENGTH IN / CM		WEIGHT LB / KG		ACCUTRIGGER ADJ.
55682	BOLT	223 REM	4	ADJUSTABLE LOP	BLACK	STAINLESS STEEL LIGHTWEIGHT BARREL	20	50,8	9	40.3	102,4	5.6	2,5	2.5-6 LBS
55683	BOLT	7MM-08 REM	4	ADJUSTABLE LOP	BLACK	STAINLESS STEEL LIGHTWEIGHT BARREL	20	50,8	9.5	40.3	102,4	5.6	2,5	2.5-6 LBS
55684	BOLT	308 WIN	4	ADJUSTABLE LOP	BLACK	STAINLESS STEEL LIGHTWEIGHT BARREL	20	50,8	10	40.3	102,4	5.6	2,5	2.5-6 LBS
55685	BOLT	243 WIN	4	ADJUSTABLE LOP	BLACK	STAINLESS STEEL LIGHTWEIGHT BARREL	20	50,8	9.3	40.3	102,4	5.6	2,5	2.5-6 LBS
55686	BOLT	6.5 CREEDMOOR	4	ADJUSTABLE LOP	BLACK	STAINLESS STEEL LIGHTWEIGHT BARREL	20	50,8	8	40.3	102,4	5.6	2,5	2.5-6 LBS
55659	BOLT	270 WIN	4	ADJUSTABLE LOP	BLACK	STAINLESS STEEL LIGHTWEIGHT BARREL	20	50,8	10	41	104,1	5.8	2,6	2.5-6 LBS

2025

SLUG GUNS/ HUNTER

The hunter series offers a wide range of models for any hunter. Redefine slug accuracy with the refreshed Savage 212 and Savage 220 Slug Guns. The bolt-action platform is built like a rifle with features including the user-adjustable AccuTrigger™ system and a button-rifled, 22-inch barrel. Oversized bolt handles and tough synthetic stocks. Select models now feature AccuStock and AccuFit. Originally only offered through the Savage Special Order Office, the 212 and 220 bolt-action turkey shotguns are now available as standard models.

- User-adjustable AccuTrigger™
- Ergonomic walnut stock
  (11/111 Lady Hunter models)
- Precision button-rifled barrels
- Detachable box magazine
- Thread-in barrel headspacing
- Winchoke Pattern choke tubes
  (212/220 Turkey models)

SAVAGE®

SPECIFICATIONS SUBJECT TO CHANGE WITHOUT NOTICE.

SLUG GUNS/ HUNTER

8 CALIBERS // **14** MODELS

- 243 WIN
- 7MM-08 REM
- 6.5 CREEDMOOR
- 308 WIN
- 270 WIN
- 30-06 SPFLD
- 20 GAUGE
- 12 GAUGE

2025

SLUG GUNS/HUNTER

212 / 220 TURKEY

PART #	ACTION	CALIBER	ROUND CPTY	STOCK	STOCK COLOR	BARREL	BARREL LENGTH IN / CM		TWIST RATE	OVERALL LENGTH IN / CM		WEIGHT LB / KG		ACCUTRIGGER ADJ.
57382	BOLT	12 GA	2	ACCUSTOCK WITH ACCUFIT	MOSSY OAK OBSESSION	MATTE BLACK CARBON STEEL	22	55,9	SMOOTH BORE	44.5	113,0	7.6	3,4	2.5-6 LBS
57383	BOLT	20 GA	2	ACCUSTOCK WITH ACCUFIT	MOSSY OAK OBSESSION	MATTE BLACK CARBON STEEL	22	55,9	SMOOTH BORE	44.5	113,0	7.6	3,4	2.5-6 LBS

220 THUMBHOLE

PART #	ACTION	CALIBER	ROUND CPTY	STOCK	STOCK COLOR	BARREL	BARREL LENGTH IN / CM		TWIST RATE	OVERALL LENGTH IN / CM		WEIGHT LB / KG		ACCUTRIGGER ADJ.
56009	BOLT	20 GA	2	WOOD LAMINATE	PEPPER	MATTE BLACK CARBON STEEL	22	55,9	24	43.5	110,5	7.8	3,5	2.5-6 LBS
56010	BOLT	20 GA	2	WOOD LAMINATE	PEPPER	STAINLESS STEEL	22	55,9	24	43.5	110,5	7.8	3,5	2.5-6 LBS

220 SLUG STAINLESS CAMO

PART #	ACTION	CALIBER	ROUND CPTY	STOCK	STOCK COLOR	BARREL	BARREL LENGTH IN / CM		TWIST RATE	OVERALL LENGTH IN / CM		WEIGHT LB / KG		ACCUTRIGGER ADJ.
56034	BOLT	20 GA	2	ACCUSTOCK WITH ACCUFIT	MOSSY OAK BREAK-UP INFINITY	STAINLESS STEEL	22	55,9	24	43.0	109,2	7.4	3,3	2.5-6 LBS

SAVAGE®

SPECIFICATIONS SUBJECT TO CHANGE WITHOUT NOTICE.

212 / 220 SLUG

PART #	ACTION	CALIBER	ROUND CPTY	STOCK	STOCK COLOR	BARREL	BARREL LENGTH IN / CM		TWIST RATE	OVERALL LENGTH IN / CM		WEIGHT LB / KG		ACCUTRIGGER ADJ.
56029	BOLT	12 GA	2	ACCUSTOCK WITH ACCUFIT	GRAY	MATTE BLACK CARBON STEEL	22	55,9	35	43.0	109,2	7.9	3,6	2.5-6 LBS
56031	BOLT	20 GA	2	ACCUSTOCK WITH ACCUFIT	GRAY	MATTE BLACK CARBON STEEL	22	55,9	24	43.0	109,2	7.3	3,3	2.5-6 LBS
LEFT HAND MODELS														
56032	BOLT	20 GA	2	ACCUSTOCK WITH ACCUFIT	GRAY	MATTE BLACK CARBON STEEL	22	55,9	24	43.0	109,2	7.3	3,3	2.5-6 LBS

212 / 220 SLUG CAMO

PART #	ACTION	CALIBER	ROUND CPTY	STOCK	STOCK COLOR	BARREL	BARREL LENGTH IN / CM		TWIST RATE	OVERALL LENGTH IN / CM		WEIGHT LB / KG		ACCUTRIGGER ADJ.
56030	BOLT	12 GA	2	ACCUSTOCK WITH ACCUFIT	MOSSY OAK BREAK-UP COUNTRY	MATTE BLACK CARBON STEEL	22	55,9	35	43.0	109,2	7.9	3,6	2.5-6 LBS
56033	BOLT	20 GA	2	ACCUSTOCK WITH ACCUFIT	MOSSY OAK BREAK-UP COUNTRY	MATTE BLACK CARBON STEEL	22	55,9	24	43.0	109,2	7.3	3,3	2.5-6 LBS

11/111 LADY HUNTER

PART #	ACTION	CALIBER	ROUND CPTY	STOCK	STOCK COLOR	BARREL	BARREL LENGTH IN / CM		TWIST RATE	OVERALL LENGTH IN / CM		WEIGHT LB / KG		ACCUTRIGGER ADJ.
55328	BOLT	243 WIN	4	WOOD	WALNUT	MATTE BLACK CARBON STEEL	20	50,8	9.3	39.5	100,3	6.0	2,7	2.5-6 LBS
55329	BOLT	7MM-08 REM	4	WOOD	WALNUT	MATTE BLACK CARBON STEEL	20	50,8	9.5	39.5	100,3	6.0	2,7	2.5-6 LBS
55330	BOLT	6.5 CREEDMOOR	4	WOOD	WALNUT	MATTE BLACK CARBON STEEL	20	50,8	8	39.5	100,3	6.0	2,7	2.5-6 LBS
55331	BOLT	308 WIN	4	WOOD	WALNUT	MATTE BLACK CARBON STEEL	20	50,8	10	39.5	100,3	6.0	2,7	2.5-6 LBS
55332	BOLT	270 WIN	4	WOOD	WALNUT	MATTE BLACK CARBON STEEL	20	50,8	10	40.3	102,4	6.5	2,9	2.5-6 LBS
55333	BOLT	30-06 SPFLD	4	WOOD	WALNUT	MATTE BLACK CARBON STEEL	20	50,8	10	40.3	102,4	6.5	2,9	2.5-6 LBS

2025

AXIS 2

Introducing the redesigned AXIS, the next evolution of an iconic Savage rifle. Featuring an ergonomic stock design, sleek bolt handle, and reliable action, the new AXIS shoots just as good as it looks. When you need reliability and accuracy out of the box, reach for a rifle with a proven legacy. Reach for the Savage AXIS.

Look for the AXIS in a wide variety of colors, full-size, compact, left-hand, optics package, along with a complete spectrum of popular hunting calibers – there is an AXIS for everyone.

- User-adjustable AccuTrigger™ (2.5-6 LBS)
- Carbon steel barreled actions
- Smooth, reliable bolt action
- Gray, FDE, or OD Green stocks
- Camo synthetic stock *(select models)*
- Compact and Left hand models
- Precision button-rifled barrel
- Detachable box magazine
- Modern design with contoured grips and fore-end
- Hardwood stock *(AXIS 2 XP Hardwood)*
- Recessed sling studs

SAVAGE®

SPECIFICATIONS SUBJECT TO CHANGE WITHOUT NOTICE.

AXIS 2

11 CALIBERS // 32 MODELS

- 223 REM
- 22-250 REM
- 243 WIN
- 25-06 REM
- 6.5 CREEDMOOR
- 270 WIN
- 7MM-08 REM
- 308 WIN
- 30-06 SPFLD
- 350 LEGEND
- 400 LEGEND

// AXIS 2

// AXIS 2 XP

// AXIS 2 PRO

2025

AXIS 2

NEW//// AXIS 2 OD GREEN

PART #	ACTION	CALIBER	ROUND CPTY	STOCK	STOCK COLOR	BARREL	BARREL LENGTH IN / CM		TWIST RATE	OVERALL LENGTH IN / CM		WEIGHT LB / KG		ACCUTRIGGER ADJ.
52037	BOLT ACTION	223 REM	4	SYNTHETIC	OD GREEN	MATTE BLACK CARBON STEEL SPORTER	22	55,9	9	42.5	108,0	6.6	3,0	2.5 - 6 LBS.
52038	BOLT ACTION	22-250 REM	4	SYNTHETIC	OD GREEN	MATTE BLACK CARBON STEEL SPORTER	22	55,9	12	42.5	108,0	6.6	3,0	2.5 - 6 LBS.
52039	BOLT ACTION	243 WIN	4	SYNTHETIC	OD GREEN	MATTE BLACK CARBON STEEL SPORTER	22	55,9	9.25	42.5	108,0	6.6	3,0	2.5 - 6 LBS.
52040	BOLT ACTION	6.5 CREEDMOOR	4	SYNTHETIC	OD GREEN	MATTE BLACK CARBON STEEL SPORTER	22	55,9	8	42.5	108,0	6.6	3,0	2.5 - 6 LBS.
52041	BOLT ACTION	7MM-08 REM	4	SYNTHETIC	OD GREEN	MATTE BLACK CARBON STEEL SPORTER	22	55,9	9.5	42.5	108,0	6.6	3,0	2.5 - 6 LBS.
52042	BOLT ACTION	308 WIN	4	SYNTHETIC	OD GREEN	MATTE BLACK CARBON STEEL SPORTER	22	55,9	10	42.5	108,0	6.6	3,0	2.5 - 6 LBS.
52043	BOLT ACTION	350 LEGEND	4	SYNTHETIC	OD GREEN	MATTE BLACK CARBON STEEL HEAVY SPORTER	18	45,7	16	38.5	97,8	6.1	2,8	2.5 - 6 LBS.
52044	BOLT ACTION	400 LEGEND	4	SYNTHETIC	OD GREEN	MATTE BLACK CARBON STEEL HEAVY SPORTER	20	50,8	16	40.5	102,9	6.4	2,9	2.5 - 6 LBS.
52045	BOLT ACTION	25-06 REM	4	SYNTHETIC	OD GREEN	MATTE BLACK CARBON STEEL SPORTER	22	55,9	10	42.5	108,0	6.6	3,0	2.5 - 6 LBS.
52046	BOLT ACTION	270 WIN	4	SYNTHETIC	OD GREEN	MATTE BLACK CARBON STEEL SPORTER	22	55,9	10	42.5	108,0	6.6	3,0	2.5 - 6 LBS.
52047	BOLT ACTION	30-06 SPFLD	4	SYNTHETIC	OD GREEN	MATTE BLACK CARBON STEEL SPORTER	22	55,9	10	42.5	108,0	6.6	3,0	2.5 - 6 LBS.
LEFT HAND MODELS														
52071	BOLT ACTION	223 REM	4	SYNTHETIC	OD GREEN	MATTE BLACK CARBON STEEL SPORTER	22	55,9	9	42.5	108,0	6.6	3,0	2.5 - 6 LBS.
52072	BOLT ACTION	22-250 REM	4	SYNTHETIC	OD GREEN	MATTE BLACK CARBON STEEL SPORTER	22	55,9	12	42.5	108,0	6.6	3,0	2.5 - 6 LBS.
52073	BOLT ACTION	243 WIN	4	SYNTHETIC	OD GREEN	MATTE BLACK CARBON STEEL SPORTER	22	55,9	9.25	42.5	108,0	6.6	3,0	2.5 - 6 LBS.
52074	BOLT ACTION	6.5 CREEDMOOR	4	SYNTHETIC	OD GREEN	MATTE BLACK CARBON STEEL SPORTER	22	55,9	8	42.5	108,0	6.6	3,0	2.5 - 6 LBS.
52075	BOLT ACTION	7MM-08 REM	4	SYNTHETIC	OD GREEN	MATTE BLACK CARBON STEEL SPORTER	22	55,9	9.5	42.5	108,0	6.6	3,0	2.5 - 6 LBS.
52076	BOLT ACTION	308 WIN	4	SYNTHETIC	OD GREEN	MATTE BLACK CARBON STEEL SPORTER	22	55,9	10	42.5	108,0	6.6	3,0	2.5 - 6 LBS.
52077	BOLT ACTION	350 LEGEND	4	SYNTHETIC	OD GREEN	MATTE BLACK CARBON STEEL HEAVY SPORTER	18	45,7	16	38.5	97,8	6.1	2,8	2.5 - 6 LBS.
52078	BOLT ACTION	400 LEGEND	4	SYNTHETIC	OD GREEN	MATTE BLACK CARBON STEEL HEAVY SPORTER	20	50,8	16	40.5	102,9	6.4	2,9	2.5 - 6 LBS.
52079	BOLT ACTION	25-06 REM	4	SYNTHETIC	OD GREEN	MATTE BLACK CARBON STEEL SPORTER	22	55,9	10	42.5	108,0	6.6	3,0	2.5 - 6 LBS.
52080	BOLT ACTION	270 WIN	4	SYNTHETIC	OD GREEN	MATTE BLACK CARBON STEEL SPORTER	22	55,9	10	42.5	108,0	6.6	3,0	2.5 - 6 LBS.
52081	BOLT ACTION	30-06 SPFLD	4	SYNTHETIC	OD GREEN	MATTE BLACK CARBON STEEL SPORTER	22	55,9	10	42.5	108,0	6.6	3,0	2.5 - 6 LBS.
COMPACT MODELS														
52105	BOLT ACTION	223 REM	4	SYNTHETIC	OD GREEN	MATTE BLACK CARBON STEEL SPORTER	20	50,8	9	39.5	100,3	6.4	2,9	2.5 - 6 LBS.
52106	BOLT ACTION	243 WIN	4	SYNTHETIC	OD GREEN	MATTE BLACK CARBON STEEL SPORTER	20	50,8	9.25	39.5	100,3	6.4	2,9	2.5 - 6 LBS.
52107	BOLT ACTION	6.5 CREEDMOOR	4	SYNTHETIC	OD GREEN	MATTE BLACK CARBON STEEL SPORTER	20	50,8	8	39.5	100,3	6.4	2,9	2.5 - 6 LBS.
52108	BOLT ACTION	7MM-08 REM	4	SYNTHETIC	OD GREEN	MATTE BLACK CARBON STEEL SPORTER	20	50,8	9.5	39.5	100,3	6.4	2,9	2.5 - 6 LBS.
52109	BOLT ACTION	308 WIN	4	SYNTHETIC	OD GREEN	MATTE BLACK CARBON STEEL SPORTER	20	50,8	10	39.5	100,3	6.4	2,9	2.5 - 6 LBS.
52110	BOLT ACTION	350 LEGEND	4	SYNTHETIC	OD GREEN	MATTE BLACK CARBON STEEL HEAVY SPORTER	18	45,7	16	37.5	95,3	6	2,7	2.5 - 6 LBS.
52111	BOLT ACTION	400 LEGEND	4	SYNTHETIC	OD GREEN	MATTE BLACK CARBON STEEL HEAVY SPORTER	20	50,8	16	39.5	100,3	6.3	2,9	2.5 - 6 LBS.
COMPACT LEFT HAND MODELS														
52127	BOLT ACTION	223 REM	4	SYNTHETIC	OD GREEN	MATTE BLACK CARBON STEEL SPORTER	20	50,8	9	39.5	100,3	6.4	2,9	2.5 - 6 LBS.
52128	BOLT ACTION	243 WIN	4	SYNTHETIC	OD GREEN	MATTE BLACK CARBON STEEL SPORTER	20	50,8	9.25	39.5	100,3	6.4	2,9	2.5 - 6 LBS.
52129	BOLT ACTION	6.5 CREEDMOOR	4	SYNTHETIC	OD GREEN	MATTE BLACK CARBON STEEL SPORTER	20	50,8	8	39.5	100,3	6.4	2,9	2.5 - 6 LBS.
52130	BOLT ACTION	7MM-08 REM	4	SYNTHETIC	OD GREEN	MATTE BLACK CARBON STEEL SPORTER	20	50,8	9.5	39.5	100,3	6.4	2,9	2.5 - 6 LBS.
52131	BOLT ACTION	308 WIN	4	SYNTHETIC	OD GREEN	MATTE BLACK CARBON STEEL SPORTER	20	50,8	10	39.5	100,3	6.4	2,9	2.5 - 6 LBS.
52132	BOLT ACTION	350 LEGEND	4	SYNTHETIC	OD GREEN	MATTE BLACK CARBON STEEL HEAVY SPORTER	18	45,7	16	37.5	95,3	6	2,7	2.5 - 6 LBS.
52133	BOLT ACTION	400 LEGEND	4	SYNTHETIC	OD GREEN	MATTE BLACK CARBON STEEL HEAVY SPORTER	20	50,8	16	39.5	100,3	6.3	2,9	2.5 - 6 LBS.

NEW//// AXIS 2 FDE

PART #	ACTION	CALIBER	ROUND CPTY	STOCK	STOCK COLOR	BARREL	BARREL LENGTH IN / CM		TWIST RATE	OVERALL LENGTH IN / CM		WEIGHT LB / KG		ACCUTRIGGER ADJ.
52048	BOLT ACTION	223 REM	4	SYNTHETIC	FDE	MATTE BLACK CARBON STEEL SPORTER	22	55,9	9	42.5	108,0	6.6	3,0	2.5 - 6 LBS.
52049	BOLT ACTION	22-250 REM	4	SYNTHETIC	FDE	MATTE BLACK CARBON STEEL SPORTER	22	55,9	12	42.5	108,0	6.6	3,0	2.5 - 6 LBS.
52050	BOLT ACTION	243 WIN	4	SYNTHETIC	FDE	MATTE BLACK CARBON STEEL SPORTER	22	55,9	9.25	42.5	108,0	6.6	3,0	2.5 - 6 LBS.
52051	BOLT ACTION	6.5 CREEDMOOR	4	SYNTHETIC	FDE	MATTE BLACK CARBON STEEL SPORTER	22	55,9	8	42.5	108,0	6.6	3,0	2.5 - 6 LBS.
52052	BOLT ACTION	7MM-08 REM	4	SYNTHETIC	FDE	MATTE BLACK CARBON STEEL SPORTER	22	55,9	9.5	42.5	108,0	6.6	3,0	2.5 - 6 LBS.
52053	BOLT ACTION	308 WIN	4	SYNTHETIC	FDE	MATTE BLACK CARBON STEEL SPORTER	22	55,9	10	42.5	108,0	6.6	3,0	2.5 - 6 LBS.
52054	BOLT ACTION	350 LEGEND	4	SYNTHETIC	FDE	MATTE BLACK CARBON STEEL SPORTER	18	45,7	16	38.5	97,8	6.1	2,8	2.5 - 6 LBS.
52055	BOLT ACTION	400 LEGEND	4	SYNTHETIC	FDE	MATTE BLACK CARBON STEEL SPORTER	20	50,8	16	40.5	102,9	6.4	2,9	2.5 - 6 LBS.
52056	BOLT ACTION	25-06 REM	4	SYNTHETIC	FDE	MATTE BLACK CARBON STEEL SPORTER	22	55,9	10	42.5	108,0	6.6	3,0	2.5 - 6 LBS.
52057	BOLT ACTION	270 WIN	4	SYNTHETIC	FDE	MATTE BLACK CARBON STEEL SPORTER	22	55,9	10	42.5	108,0	6.6	3,0	2.5 - 6 LBS.
52058	BOLT ACTION	30-06 SPFLD	4	SYNTHETIC	FDE	MATTE BLACK CARBON STEEL SPORTER	22	55,9	10	42.5	108,0	6.6	3,0	2.5 - 6 LBS.
LEFT HAND MODELS														
52082	BOLT ACTION	223 REM	4	SYNTHETIC	FDE	MATTE BLACK CARBON STEEL SPORTER	22	55,9	9	42.5	108,0	6.6	3,0	2.5 - 6 LBS.
52083	BOLT ACTION	22-250 REM	4	SYNTHETIC	FDE	MATTE BLACK CARBON STEEL SPORTER	22	55,9	12	42.5	108,0	6.6	3,0	2.5 - 6 LBS.
52084	BOLT ACTION	243 WIN	4	SYNTHETIC	FDE	MATTE BLACK CARBON STEEL SPORTER	22	55,9	9.25	42.5	108,0	6.6	3,0	2.5 - 6 LBS.
52085	BOLT ACTION	6.5 CREEDMOOR	4	SYNTHETIC	FDE	MATTE BLACK CARBON STEEL SPORTER	22	55,9	8	42.5	108,0	6.6	3,0	2.5 - 6 LBS.
52086	BOLT ACTION	7MM-08 REM	4	SYNTHETIC	FDE	MATTE BLACK CARBON STEEL SPORTER	22	55,9	9.5	42.5	108,0	6.6	3,0	2.5 - 6 LBS.
52087	BOLT ACTION	308 WIN	4	SYNTHETIC	FDE	MATTE BLACK CARBON STEEL SPORTER	22	55,9	10	42.5	108,0	6.6	3,0	2.5 - 6 LBS.
52088	BOLT ACTION	350 LEGEND	4	SYNTHETIC	FDE	MATTE BLACK CARBON STEEL SPORTER	22	55,9	16	38.5	97,8	6.1	2,8	2.5 - 6 LBS.
52089	BOLT ACTION	400 LEGEND	4	SYNTHETIC	FDE	MATTE BLACK CARBON STEEL SPORTER	22	55,9	16	40.5	102,9	6.4	2,9	2.5 - 6 LBS.
52090	BOLT ACTION	25-06 REM	4	SYNTHETIC	FDE	MATTE BLACK CARBON STEEL SPORTER	22	55,9	10	42.5	108,0	6.6	3,0	2.5 - 6 LBS.
52091	BOLT ACTION	270 WIN	4	SYNTHETIC	FDE	MATTE BLACK CARBON STEEL SPORTER	22	55,9	10	42.5	108,0	6.6	3,0	2.5 - 6 LBS.
52092	BOLT ACTION	30-06 SPFLD	4	SYNTHETIC	FDE	MATTE BLACK CARBON STEEL SPORTER	22	55,9	10	42.5	108,0	6.6	3,0	2.5 - 6 LBS.
COMPACT MODELS														
52112	BOLT ACTION	223 REM	4	SYNTHETIC	FDE	MATTE BLACK CARBON STEEL SPORTER	20	50,8	9	39.5	100,3	6.4	2,9	2.5 - 6 LBS.
52113	BOLT ACTION	243 WIN	4	SYNTHETIC	FDE	MATTE BLACK CARBON STEEL SPORTER	20	50,8	9.25	39.5	100,3	6.4	2,9	2.5 - 6 LBS.
52114	BOLT ACTION	6.5 CREEDMOOR	4	SYNTHETIC	FDE	MATTE BLACK CARBON STEEL SPORTER	20	50,8	8	39.5	100,3	6.4	2,9	2.5 - 6 LBS.
52115	BOLT ACTION	7MM-08 REM	4	SYNTHETIC	FDE	MATTE BLACK CARBON STEEL SPORTER	20	50,8	9.5	39.5	100,3	6.4	2,9	2.5 - 6 LBS.
52116	BOLT ACTION	308 WIN	4	SYNTHETIC	FDE	MATTE BLACK CARBON STEEL SPORTER	20	50,8	10	39.5	100,3	6.4	2,9	2.5 - 6 LBS.
52117	BOLT ACTION	350 LEGEND	4	SYNTHETIC	FDE	MATTE BLACK CARBON STEEL SPORTER	18	45,7	16	39.5	100,3	6	2,7	2.5 - 6 LBS.
52118	BOLT ACTION	400 LEGEND	4	SYNTHETIC	FDE	MATTE BLACK CARBON STEEL SPORTER	20	50,8	16	37.5	95,3	6.3	2,9	2.5 - 6 LBS.
COMPACT LEFT HAND MODELS														
52134	BOLT ACTION	223 REM	4	SYNTHETIC	FDE	MATTE BLACK CARBON STEEL SPORTER	20	50,8	9	39.5	100,3	6.4	2,9	2.5 - 6 LBS.
52135	BOLT ACTION	243 WIN	4	SYNTHETIC	FDE	MATTE BLACK CARBON STEEL SPORTER	20	50,8	9.25	39.5	100,3	6.4	2,9	2.5 - 6 LBS.
52136	BOLT ACTION	6.5 CREEDMOOR	4	SYNTHETIC	FDE	MATTE BLACK CARBON STEEL SPORTER	20	50,8	8	39.5	100,3	6.4	2,9	2.5 - 6 LBS.
52137	BOLT ACTION	7MM-08 REM	4	SYNTHETIC	FDE	MATTE BLACK CARBON STEEL SPORTER	20	50,8	9.5	39.5	100,3	6.4	2,9	2.5 - 6 LBS.
52138	BOLT ACTION	308 WIN	4	SYNTHETIC	FDE	MATTE BLACK CARBON STEEL SPORTER	20	50,8	10	39.5	100,3	6.4	2,9	2.5 - 6 LBS.
52139	BOLT ACTION	350 LEGEND	4	SYNTHETIC	FDE	MATTE BLACK CARBON STEEL SPORTER	18	45,7	16	39.5	100,3	6	2,7	2.5 - 6 LBS.
52140	BOLT ACTION	400 LEGEND	4	SYNTHETIC	FDE	MATTE BLACK CARBON STEEL SPORTER	20	50,8	16	37.5	95,3	6.3	2,9	2.5 - 6 LBS.

NEW//// AXIS 2 GRAY

PART #	ACTION	CALIBER	ROUND CPTY	STOCK	STOCK COLOR	BARREL	BARREL LENGTH IN / CM		TWIST RATE	OVERALL LENGTH IN / CM		WEIGHT LB / KG		ACCUTRIGGER ADJ.
52059	BOLT ACTION	223 REM	4	SYNTHETIC	GRAY	MATTE BLACK CARBON STEEL SPORTER	22	55,9	9	42.5	108,0	6.6	3,0	2.5 - 6 LBS.
52060	BOLT ACTION	22-250 REM	4	SYNTHETIC	GRAY	MATTE BLACK CARBON STEEL SPORTER	22	55,9	12	42.5	108,0	6.6	3,0	2.5 - 6 LBS.
52061	BOLT ACTION	243 WIN	4	SYNTHETIC	GRAY	MATTE BLACK CARBON STEEL SPORTER	22	55,9	9.25	42.5	108,0	6.6	3,0	2.5 - 6 LBS.
52062	BOLT ACTION	6.5 CREEDMOOR	4	SYNTHETIC	GRAY	MATTE BLACK CARBON STEEL SPORTER	22	55,9	8	42.5	108,0	6.6	3,0	2.5 - 6 LBS.
52063	BOLT ACTION	7MM-08 REM	4	SYNTHETIC	GRAY	MATTE BLACK CARBON STEEL SPORTER	22	55,9	9.5	42.5	108,0	6.6	3,0	2.5 - 6 LBS.
52064	BOLT ACTION	308 WIN	4	SYNTHETIC	GRAY	MATTE BLACK CARBON STEEL SPORTER	22	55,9	10	42.5	108,0	6.6	3,0	2.5 - 6 LBS.
52065	BOLT ACTION	300 AAC BLACKOUT	4	SYNTHETIC	GRAY	MATTE BLACK CARBON STEEL MEDIUM WEIGHT	16.1	41,0	8	36.6	93,0	6	2,7	2.5 - 6 LBS.
52066	BOLT ACTION	350 LEGEND	4	SYNTHETIC	GRAY	MATTE BLACK CARBON STEEL HEAVY SPORTER	18	45,7	16	38.5	97,8	6.1	2,8	2.5 - 6 LBS.
52067	BOLT ACTION	400 LEGEND	4	SYNTHETIC	GRAY	MATTE BLACK CARBON STEEL HEAVY SPORTER	20	50,8	16	40.5	102,9	6.4	2,9	2.5 - 6 LBS.
52068	BOLT ACTION	25-06 REM	4	SYNTHETIC	GRAY	MATTE BLACK CARBON STEEL SPORTER	22	55,9	10	42.5	108,0	6.6	3,0	2.5 - 6 LBS.
52069	BOLT ACTION	270 WIN	4	SYNTHETIC	GRAY	MATTE BLACK CARBON STEEL SPORTER	22	55,9	10	42.5	108,0	6.6	3,0	2.5 - 6 LBS.
LEFT HAND MODELS														
52070	BOLT ACTION	30-06 SPFLD	4	SYNTHETIC	GRAY	MATTE BLACK CARBON STEEL SPORTER	22	55,9	10	42.5	108,0	6.6	3,0	2.5 - 6 LBS.
52093	BOLT ACTION	223 REM	4	SYNTHETIC	GRAY	MATTE BLACK CARBON STEEL SPORTER	22	55,9	9	42.5	108,0	6.6	3,0	2.5 - 6 LBS.
52094	BOLT ACTION	22-250 REM	4	SYNTHETIC	GRAY	MATTE BLACK CARBON STEEL SPORTER	22	55,9	12	42.5	108,0	6.6	3,0	2.5 - 6 LBS.
52095	BOLT ACTION	243 WIN	4	SYNTHETIC	GRAY	MATTE BLACK CARBON STEEL SPORTER	22	55,9	9.25	42.5	108,0	6.6	3,0	2.5 - 6 LBS.
52096	BOLT ACTION	6.5 CREEDMOOR	4	SYNTHETIC	GRAY	MATTE BLACK CARBON STEEL SPORTER	22	55,9	8	42.5	108,0	6.6	3,0	2.5 - 6 LBS.
52097	BOLT ACTION	7MM-08 REM	4	SYNTHETIC	GRAY	MATTE BLACK CARBON STEEL SPORTER	22	55,9	9.5	42.5	108,0	6.6	3,0	2.5 - 6 LBS.
52098	BOLT ACTION	308 WIN	4	SYNTHETIC	GRAY	MATTE BLACK CARBON STEEL SPORTER	22	55,9	10	42.5	108,0	6.6	3,0	2.5 - 6 LBS.
52099	BOLT ACTION	300 AAC BLACKOUT	4	SYNTHETIC	GRAY	MATTE BLACK CARBON STEEL MEDIUM WEIGHT	16.1	41,0	8	36.6	93,0	6	2,7	2.5 - 6 LBS.
52100	BOLT ACTION	350 LEGEND	4	SYNTHETIC	GRAY	MATTE BLACK CARBON STEEL HEAVY SPORTER	18	45,7	16	38.5	97,8	6.1	2,8	2.5 - 6 LBS.
52101	BOLT ACTION	400 LEGEND	4	SYNTHETIC	GRAY	MATTE BLACK CARBON STEEL HEAVY SPORTER	20	50,8	16	40.5	102,9	6.4	2,9	2.5 - 6 LBS.
52102	BOLT ACTION	25-06 REM	4	SYNTHETIC	GRAY	MATTE BLACK CARBON STEEL SPORTER	22	55,9	10	42.5	108,0	6.6	3,0	2.5 - 6 LBS.
52103	BOLT ACTION	270 WIN	4	SYNTHETIC	GRAY	MATTE BLACK CARBON STEEL SPORTER	22	55,9	10	42.5	108,0	6.6	3,0	2.5 - 6 LBS.
52104	BOLT ACTION	30-06 SPFLD	4	SYNTHETIC	GRAY	MATTE BLACK CARBON STEEL SPORTER	22	55,9	10	42.5	108,0	6.6	3,0	2.5 - 6 LBS.
COMPACT MODELS														
52119	BOLT ACTION	223 REM	4	SYNTHETIC	GRAY	MATTE BLACK CARBON STEEL SPORTER	20	50,8	9	39.5	100,3	6.4	2,9	2.5 - 6 LBS.
52120	BOLT ACTION	243 WIN	4	SYNTHETIC	GRAY	MATTE BLACK CARBON STEEL SPORTER	20	50,8	9.25	39.5	100,3	6.4	2,9	2.5 - 6 LBS.
52121	BOLT ACTION	6.5 CREEDMOOR	4	SYNTHETIC	GRAY	MATTE BLACK CARBON STEEL SPORTER	20	50,8	8	39.5	100,3	6.4	2,9	2.5 - 6 LBS.
52122	BOLT ACTION	7MM-08 REM	4	SYNTHETIC	GRAY	MATTE BLACK CARBON STEEL SPORTER	20	50,8	9.5	39.5	100,3	6.4	2,9	2.5 - 6 LBS.
52123	BOLT ACTION	308 WIN	4	SYNTHETIC	GRAY	MATTE BLACK CARBON STEEL SPORTER	20	50,8	10	39.5	100,3	6.4	2,9	2.5 - 6 LBS.
52124	BOLT ACTION	300 AAC BLACKOUT	4	SYNTHETIC	GRAY	MATTE BLACK CARBON STEEL MEDIUM WEIGHT	16.1	41,0	8	35.6	90,5	5.9	2,7	2.5 - 6 LBS.
52125	BOLT ACTION	350 LEGEND	4	SYNTHETIC	GRAY	MATTE BLACK CARBON STEEL HEAVY SPORTER	18	45,7	16	37.5	95,3	6	2,7	2.5 - 6 LBS.
52126	BOLT ACTION	400 LEGEND	4	SYNTHETIC	GRAY	MATTE BLACK CARBON STEEL HEAVY SPORTER	20	50,8	16	39.5	100,3	6.3	2,9	2.5 - 6 LBS.
COMPACT LEFT HAND MODELS														
52141	BOLT ACTION	223 REM	4	SYNTHETIC	GRAY	MATTE BLACK CARBON STEEL SPORTER	20	50,8	9	39.5	100,3	6.4	2,9	2.5 - 6 LBS.
52142	BOLT ACTION	243 WIN	4	SYNTHETIC	GRAY	MATTE BLACK CARBON STEEL SPORTER	20	50,8	9.25	39.5	100,3	6.4	2,9	2.5 - 6 LBS.
52143	BOLT ACTION	6.5 CREEDMOOR	4	SYNTHETIC	GRAY	MATTE BLACK CARBON STEEL SPORTER	20	50,8	8	39.5	100,3	6.4	2,9	2.5 - 6 LBS.
52144	BOLT ACTION	7MM-08 REM	4	SYNTHETIC	GRAY	MATTE BLACK CARBON STEEL SPORTER	20	50,8	9.5	39.5	100,3	6.4	2,9	2.5 - 6 LBS.
52145	BOLT ACTION	308 WIN	4	SYNTHETIC	GRAY	MATTE BLACK CARBON STEEL SPORTER	20	50,8	10	39.5	100,3	6.4	2,9	2.5 - 6 LBS.
52146	BOLT ACTION	300 AAC BLACKOUT	4	SYNTHETIC	GRAY	MATTE BLACK CARBON STEEL MEDIUM WEIGHT	16.1	41,0	8	35.6	90,5	5.9	2,7	2.5 - 6 LBS.
52147	BOLT ACTION	350 LEGEND	4	SYNTHETIC	GRAY	MATTE BLACK CARBON STEEL HEAVY SPORTER	18	45,7	16	37.5	95,3	6	2,7	2.5 - 6 LBS.
52148	BOLT ACTION	400 LEGEND	4	SYNTHETIC	GRAY	MATTE BLACK CARBON STEEL HEAVY SPORTER	20	50,8	16	39.5	100,3	6.3	2,9	2.5 - 6 LBS.

NEW//// AXIS 2 PRO WOODLAND

PART #	ACTION	CALIBER	ROUND CPTY	STOCK	STOCK COLOR	BARREL	BARREL LENGTH IN / CM		TWIST RATE	OVERALL LENGTH IN / CM		WEIGHT LB / KG		ACCUTRIGGER ADJ.
52279	BOLT ACTION	223 REM	4	SYNTHETIC	SAVAGE WOODLAND	GUN METAL BRONZE CARBON STEEL HEAVY SPORTER	20	50,8	9	40.5	102,9	6.8	3,1	2.5 - 6 LBS.
52280	BOLT ACTION	22-250 REM	4	SYNTHETIC	SAVAGE WOODLAND	GUN METAL BRONZE CARBON STEEL HEAVY SPORTER	20	50,8	12	40.5	102,9	6.8	3,1	2.5 - 6 LBS.
52281	BOLT ACTION	243 WIN	4	SYNTHETIC	SAVAGE WOODLAND	GUN METAL BRONZE CARBON STEEL HEAVY SPORTER	20	50,8	9.25	40.5	102,9	6.8	3,1	2.5 - 6 LBS.
52282	BOLT ACTION	6.5 CREEDMOOR	4	SYNTHETIC	SAVAGE WOODLAND	GUN METAL BRONZE CARBON STEEL HEAVY SPORTER	20	50,8	8	40.5	102,9	6.8	3,1	2.5 - 6 LBS.
52283	BOLT ACTION	7MM-08 REM	4	SYNTHETIC	SAVAGE WOODLAND	GUN METAL BRONZE CARBON STEEL HEAVY SPORTER	20	50,8	9.5	40.5	102,9	6.8	3,1	2.5 - 6 LBS.
52284	BOLT ACTION	308 WIN	4	SYNTHETIC	SAVAGE WOODLAND	GUN METAL BRONZE CARBON STEEL HEAVY SPORTER	20	50,8	10	40.5	102,9	6.8	3,1	2.5 - 6 LBS.
52285	BOLT ACTION	350 LEGEND	4	SYNTHETIC	SAVAGE WOODLAND	GUN METAL BRONZE CARBON STEEL HEAVY SPORTER	18	45,7	16	38.5	97,8	6.7	3,0	2.5 - 6 LBS.
52286	BOLT ACTION	400 LEGEND	4	SYNTHETIC	SAVAGE WOODLAND	GUN METAL BRONZE CARBON STEEL HEAVY SPORTER	20	50,8	16	40.5	102,9	6.9	3,1	2.5 - 6 LBS.
52287	BOLT ACTION	25-06 REM	4	SYNTHETIC	SAVAGE WOODLAND	GUN METAL BRONZE CARBON STEEL HEAVY SPORTER	20	50,8	10	40.5	102,9	6.8	3,1	2.5 - 6 LBS.
52288	BOLT ACTION	270 WIN	4	SYNTHETIC	SAVAGE WOODLAND	GUN METAL BRONZE CARBON STEEL HEAVY SPORTER	20	50,8	10	40.5	102,9	6.8	3,1	2.5 - 6 LBS.
52289	BOLT ACTION	30-06 SPFLD	4	SYNTHETIC	SAVAGE WOODLAND	GUN METAL BRONZE CARBON STEEL HEAVY SPORTER	20	50,8	10	40.5	102,9	6.8	3,1	2.5 - 6 LBS.
LEFT HAND MODELS														
52290	BOLT ACTION	223 REM	4	SYNTHETIC	SAVAGE WOODLAND	GUN METAL BRONZE CARBON STEEL HEAVY SPORTER	20	50,8	9	40.5	102,9	6.8	3,1	2.5 - 6 LBS.
52291	BOLT ACTION	22-250 REM	4	SYNTHETIC	SAVAGE WOODLAND	GUN METAL BRONZE CARBON STEEL HEAVY SPORTER	20	50,8	12	40.5	102,9	6.8	3,1	2.5 - 6 LBS.
52292	BOLT ACTION	243 WIN	4	SYNTHETIC	SAVAGE WOODLAND	GUN METAL BRONZE CARBON STEEL HEAVY SPORTER	20	50,8	9.25	40.5	102,9	6.8	3,1	2.5 - 6 LBS.
52293	BOLT ACTION	6.5 CREEDMOOR	4	SYNTHETIC	SAVAGE WOODLAND	GUN METAL BRONZE CARBON STEEL HEAVY SPORTER	20	50,8	8	40.5	102,9	6.8	3,1	2.5 - 6 LBS.
52294	BOLT ACTION	7MM-08 REM	4	SYNTHETIC	SAVAGE WOODLAND	GUN METAL BRONZE CARBON STEEL HEAVY SPORTER	20	50,8	9.5	40.5	102,9	6.8	3,1	2.5 - 6 LBS.
52295	BOLT ACTION	308 WIN	4	SYNTHETIC	SAVAGE WOODLAND	GUN METAL BRONZE CARBON STEEL HEAVY SPORTER	20	50,8	10	40.5	102,9	6.8	3,1	2.5 - 6 LBS.
52296	BOLT ACTION	350 LEGEND	4	SYNTHETIC	SAVAGE WOODLAND	GUN METAL BRONZE CARBON STEEL HEAVY SPORTER	18	45,7	16	38.5	97,8	6.7	3,0	2.5 - 6 LBS.
52297	BOLT ACTION	400 LEGEND	4	SYNTHETIC	SAVAGE WOODLAND	GUN METAL BRONZE CARBON STEEL HEAVY SPORTER	20	50,8	16	40.5	102,9	6.9	3,1	2.5 - 6 LBS.
52298	BOLT ACTION	25-06 REM	4	SYNTHETIC	SAVAGE WOODLAND	GUN METAL BRONZE CARBON STEEL HEAVY SPORTER	20	50,8	10	40.5	102,9	6.8	3,1	2.5 - 6 LBS.
52299	BOLT ACTION	270 WIN	4	SYNTHETIC	SAVAGE WOODLAND	GUN METAL BRONZE CARBON STEEL HEAVY SPORTER	20	50,8	10	40.5	102,9	6.8	3,1	2.5 - 6 LBS.
52300	BOLT ACTION	30-06 SPFLD	4	SYNTHETIC	SAVAGE WOODLAND	GUN METAL BRONZE CARBON STEEL HEAVY SPORTER	20	50,8	10	40.5	102,9	6.8	3,1	2.5 - 6 LBS.
COMPACT MODELS														
52301	BOLT ACTION	223 REM	4	SYNTHETIC	SAVAGE WOODLAND	GUN METAL BRONZE CARBON STEEL HEAVY SPORTER	20	50,8	9	39.5	100,3	6.7	3,0	2.5 - 6 LBS.
52302	BOLT ACTION	243 WIN	4	SYNTHETIC	SAVAGE WOODLAND	GUN METAL BRONZE CARBON STEEL HEAVY SPORTER	20	50,8	9.25	39.5	100,3	6.7	3,0	2.5 - 6 LBS.
52303	BOLT ACTION	6.5 CREEDMOOR	4	SYNTHETIC	SAVAGE WOODLAND	GUN METAL BRONZE CARBON STEEL HEAVY SPORTER	20	50,8	8	39.5	100,3	6.7	3,0	2.5 - 6 LBS.
52304	BOLT ACTION	7MM-08 REM	4	SYNTHETIC	SAVAGE WOODLAND	GUN METAL BRONZE CARBON STEEL HEAVY SPORTER	20	50,8	9.5	39.5	100,3	6.7	3,0	2.5 - 6 LBS.
52305	BOLT ACTION	308 WIN	4	SYNTHETIC	SAVAGE WOODLAND	GUN METAL BRONZE CARBON STEEL HEAVY SPORTER	20	50,8	10	39.5	100,3	6.7	3,0	2.5 - 6 LBS.
52306	BOLT ACTION	350 LEGEND	4	SYNTHETIC	SAVAGE WOODLAND	GUN METAL BRONZE CARBON STEEL HEAVY SPORTER	18	45,7	16	37.5	95,3	6.6	3,0	2.5 - 6 LBS.
52307	BOLT ACTION	400 LEGEND	4	SYNTHETIC	SAVAGE WOODLAND	GUN METAL BRONZE CARBON STEEL HEAVY SPORTER	20	50,8	16	39.5	100,3	6.8	3,1	2.5 - 6 LBS.
COMPACT LEFT HAND MODELS														
52308	BOLT ACTION	223 REM	4	SYNTHETIC	SAVAGE WOODLAND	GUN METAL BRONZE CARBON STEEL HEAVY SPORTER	20	50,8	9	39.5	100,3	6.7	3,0	2.5 - 6 LBS.
52309	BOLT ACTION	243 WIN	4	SYNTHETIC	SAVAGE WOODLAND	GUN METAL BRONZE CARBON STEEL HEAVY SPORTER	20	50,8	9.25	39.5	100,3	6.7	3,0	2.5 - 6 LBS.
52310	BOLT ACTION	6.5 CREEDMOOR	4	SYNTHETIC	SAVAGE WOODLAND	GUN METAL BRONZE CARBON STEEL HEAVY SPORTER	20	50,8	8	39.5	100,3	6.7	3,0	2.5 - 6 LBS.
52311	BOLT ACTION	7MM-08 REM	4	SYNTHETIC	SAVAGE WOODLAND	GUN METAL BRONZE CARBON STEEL HEAVY SPORTER	20	50,8	9.5	39.5	100,3	6.7	3,0	2.5 - 6 LBS.
52312	BOLT ACTION	308 WIN	4	SYNTHETIC	SAVAGE WOODLAND	GUN METAL BRONZE CARBON STEEL HEAVY SPORTER	20	50,8	10	39.5	100,3	6.7	3,0	2.5 - 6 LBS.
52313	BOLT ACTION	350 LEGEND	4	SYNTHETIC	SAVAGE WOODLAND	GUN METAL BRONZE CARBON STEEL HEAVY SPORTER	18	45,7	16	37.5	95,3	6.6	3,0	2.5 - 6 LBS.
52314	BOLT ACTION	400 LEGEND	4	SYNTHETIC	SAVAGE WOODLAND	GUN METAL BRONZE CARBON STEEL HEAVY SPORTER	20	50,8	16	39.5	100,3	6.8	3,1	2.5 - 6 LBS.

NEW//// AXIS 2 PRO WESTERN

PART #	ACTION	CALIBER	ROUND CPTY	STOCK	STOCK COLOR	BARREL	BARREL LENGTH IN / CM		TWIST RATE	OVERALL LENGTH IN / CM		WEIGHT LB / KG		ACCUTRIGGER ADJ.
52315	BOLT ACTION	223 REM	4	SYNTHETIC	SAVAGE WOODLAND	GUN METAL BRONZE CARBON STEEL HEAVY SPORTER	20	50,8	9	40.5	102,9	6.8	3,1	2.5 - 6 LBS.
52316	BOLT ACTION	22-250 REM	4	SYNTHETIC	SAVAGE WESTERN	GUN METAL BRONZE CARBON STEEL HEAVY SPORTER	20	50,8	12	40.5	102,9	6.8	3,1	2.5 - 6 LBS.
52317	BOLT ACTION	243 WIN	4	SYNTHETIC	SAVAGE WESTERN	GUN METAL BRONZE CARBON STEEL HEAVY SPORTER	20	50,8	9.25	40.5	102,9	6.8	3,1	2.5 - 6 LBS.
52318	BOLT ACTION	6.5 CREEDMOOR	4	SYNTHETIC	SAVAGE WESTERN	GUN METAL BRONZE CARBON STEEL HEAVY SPORTER	20	50,8	8	40.5	102,9	6.8	3,1	2.5 - 6 LBS.
52319	BOLT ACTION	7MM-08 REM	4	SYNTHETIC	SAVAGE WESTERN	GUN METAL BRONZE CARBON STEEL HEAVY SPORTER	20	50,8	9.5	40.5	102,9	6.8	3,1	2.5 - 6 LBS.
52320	BOLT ACTION	308 WIN	4	SYNTHETIC	SAVAGE WESTERN	GUN METAL BRONZE CARBON STEEL HEAVY SPORTER	20	50,8	10	40.5	102,9	6.8	3,1	2.5 - 6 LBS.
52321	BOLT ACTION	350 LEGEND	4	SYNTHETIC	SAVAGE WESTERN	GUN METAL BRONZE CARBON STEEL HEAVY SPORTER	18	45,7	16	38.5	97,8	6.7	3,0	2.5 - 6 LBS.
52322	BOLT ACTION	400 LEGEND	4	SYNTHETIC	SAVAGE WESTERN	GUN METAL BRONZE CARBON STEEL HEAVY SPORTER	20	50,8	16	40.5	102,9	6.9	3,1	2.5 - 6 LBS.
52323	BOLT ACTION	25-06 REM	4	SYNTHETIC	SAVAGE WESTERN	GUN METAL BRONZE CARBON STEEL HEAVY SPORTER	20	50,8	10	40.5	102,9	6.8	3,1	2.5 - 6 LBS.
52324	BOLT ACTION	270 WIN	4	SYNTHETIC	SAVAGE WESTERN	GUN METAL BRONZE CARBON STEEL HEAVY SPORTER	20	50,8	10	40.5	102,9	6.8	3,1	2.5 - 6 LBS.
52325	BOLT ACTION	30-06 SPFLD	4	SYNTHETIC	SAVAGE WESTERN	GUN METAL BRONZE CARBON STEEL HEAVY SPORTER	20	50,8	10	40.5	102,9	6.8	3,1	2.5 - 6 LBS.
LEFT HAND MODELS														
52326	BOLT ACTION	223 REM	4	SYNTHETIC	SAVAGE WESTERN	GUN METAL BRONZE CARBON STEEL HEAVY SPORTER	20	50,8	9	40.5	102,9	6.8	3,1	2.5 - 6 LBS.
52327	BOLT ACTION	22-250 REM	4	SYNTHETIC	SAVAGE WESTERN	GUN METAL BRONZE CARBON STEEL HEAVY SPORTER	20	50,8	12	40.5	102,9	6.8	3,1	2.5 - 6 LBS.
52328	BOLT ACTION	243 WIN	4	SYNTHETIC	SAVAGE WESTERN	GUN METAL BRONZE CARBON STEEL HEAVY SPORTER	20	50,8	9.25	40.5	102,9	6.8	3,1	2.5 - 6 LBS.
52329	BOLT ACTION	6.5 CREEDMOOR	4	SYNTHETIC	SAVAGE WESTERN	GUN METAL BRONZE CARBON STEEL HEAVY SPORTER	20	50,8	8	40.5	102,9	6.8	3,1	2.5 - 6 LBS.
52330	BOLT ACTION	7MM-08 REM	4	SYNTHETIC	SAVAGE WESTERN	GUN METAL BRONZE CARBON STEEL HEAVY SPORTER	20	50,8	9.5	40.5	102,9	6.8	3,1	2.5 - 6 LBS.
52331	BOLT ACTION	308 WIN	4	SYNTHETIC	SAVAGE WESTERN	GUN METAL BRONZE CARBON STEEL HEAVY SPORTER	20	50,8	10	40.5	102,9	6.8	3,1	2.5 - 6 LBS.
52332	BOLT ACTION	350 LEGEND	4	SYNTHETIC	SAVAGE WESTERN	GUN METAL BRONZE CARBON STEEL HEAVY SPORTER	18	45,7	16	38.5	97,8	6.7	3,0	2.5 - 6 LBS.
52333	BOLT ACTION	400 LEGEND	4	SYNTHETIC	SAVAGE WESTERN	GUN METAL BRONZE CARBON STEEL HEAVY SPORTER	20	50,8	16	40.5	102,9	6.9	3,1	2.5 - 6 LBS.
52334	BOLT ACTION	25-06 REM	4	SYNTHETIC	SAVAGE WESTERN	GUN METAL BRONZE CARBON STEEL HEAVY SPORTER	20	50,8	10	40.5	102,9	6.8	3,1	2.5 - 6 LBS.
52335	BOLT ACTION	270 WIN	4	SYNTHETIC	SAVAGE WESTERN	GUN METAL BRONZE CARBON STEEL HEAVY SPORTER	20	50,8	10	40.5	102,9	6.8	3,1	2.5 - 6 LBS.
52336	BOLT ACTION	30-06 SPFLD	4	SYNTHETIC	SAVAGE WESTERN	GUN METAL BRONZE CARBON STEEL HEAVY SPORTER	20	50,8	10	40.5	102,9	6.8	3,1	2.5 - 6 LBS.
COMPACT MODELS														
52337	BOLT ACTION	223 REM	4	SYNTHETIC	SAVAGE WESTERN	GUN METAL BRONZE CARBON STEEL HEAVY SPORTER	20	50,8	9	39.5	100,3	6.7	3,0	2.5 - 6 LBS.
52338	BOLT ACTION	243 WIN	4	SYNTHETIC	SAVAGE WESTERN	GUN METAL BRONZE CARBON STEEL HEAVY SPORTER	20	50,8	9.25	39.5	100,3	6.7	3,0	2.5 - 6 LBS.
52339	BOLT ACTION	6.5 CREEDMOOR	4	SYNTHETIC	SAVAGE WESTERN	GUN METAL BRONZE CARBON STEEL HEAVY SPORTER	20	50,8	8	39.5	100,3	6.7	3,0	2.5 - 6 LBS.
52340	BOLT ACTION	7MM-08 REM	4	SYNTHETIC	SAVAGE WESTERN	GUN METAL BRONZE CARBON STEEL HEAVY SPORTER	20	50,8	9.5	39.5	100,3	6.7	3,0	2.5 - 6 LBS.
52341	BOLT ACTION	308 WIN	4	SYNTHETIC	SAVAGE WESTERN	GUN METAL BRONZE CARBON STEEL HEAVY SPORTER	20	50,8	10	39.5	100,3	6.7	3,0	2.5 - 6 LBS.
52342	BOLT ACTION	350 LEGEND	4	SYNTHETIC	SAVAGE WESTERN	GUN METAL BRONZE CARBON STEEL HEAVY SPORTER	18	45,7	16	37.5	95,3	6.6	3,0	2.5 - 6 LBS.
52343	BOLT ACTION	400 LEGEND	4	SYNTHETIC	SAVAGE WESTERN	GUN METAL BRONZE CARBON STEEL HEAVY SPORTER	20	50,8	16	39.5	100,3	6.8	3,1	2.5 - 6 LBS.
COMPACT LEFT HAND MODELS														
52344	BOLT ACTION	223 REM	4	SYNTHETIC	SAVAGE WESTERN	GUN METAL BRONZE CARBON STEEL HEAVY SPORTER	20	50,8	9	39.5	100,3	6.7	3,0	2.5 - 6 LBS.
52345	BOLT ACTION	243 WIN	4	SYNTHETIC	SAVAGE WESTERN	GUN METAL BRONZE CARBON STEEL HEAVY SPORTER	20	50,8	9.25	39.5	100,3	6.7	3,0	2.5 - 6 LBS.
52346	BOLT ACTION	6.5 CREEDMOOR	4	SYNTHETIC	SAVAGE WESTERN	GUN METAL BRONZE CARBON STEEL HEAVY SPORTER	20	50,8	8	39.5	100,3	6.7	3,0	2.5 - 6 LBS.
52347	BOLT ACTION	7MM-08 REM	4	SYNTHETIC	SAVAGE WESTERN	GUN METAL BRONZE CARBON STEEL HEAVY SPORTER	20	50,8	9.5	39.5	100,3	6.7	3,0	2.5 - 6 LBS.
52348	BOLT ACTION	308 WIN	4	SYNTHETIC	SAVAGE WESTERN	GUN METAL BRONZE CARBON STEEL HEAVY SPORTER	20	50,8	10	39.5	100,3	6.7	3,0	2.5 - 6 LBS.
52349	BOLT ACTION	350 LEGEND	4	SYNTHETIC	SAVAGE WESTERN	GUN METAL BRONZE CARBON STEEL HEAVY SPORTER	18	45,7	16	37.5	95,3	6.6	3,0	2.5 - 6 LBS.
52350	BOLT ACTION	400 LEGEND	4	SYNTHETIC	SAVAGE WESTERN	GUN METAL BRONZE CARBON STEEL HEAVY SPORTER	20	50,8	16	39.5	100,3	6.8	3,1	2.5 - 6 LBS.

SAVAGE®

SPECIFICATIONS SUBJECT TO CHANGE WITHOUT NOTICE.

NEW//// AXIS 2 XP OD GREEN

PART #	ACTION	CALIBER	ROUND CPTY	STOCK	STOCK COLOR	BARREL	BARREL LENGTH IN / CM		TWIST RATE	OVERALL LENGTH IN / CM		WEIGHT LB / KG		ACCUTRIGGER ADJ.
52149	BOLT ACTION	223 REM	4	SYNTHETIC	OD GREEN	MATTE BLACK CARBON STEEL SPORTER	22	55,9	9	42.5	108,0	7.7	3,5	2.5 - 6 LBS.
52150	BOLT ACTION	22-250 REM	4	SYNTHETIC	OD GREEN	MATTE BLACK CARBON STEEL SPORTER	22	55,9	12	42.5	108,0	7.7	3,5	2.5 - 6 LBS.
52151	BOLT ACTION	243 WIN	4	SYNTHETIC	OD GREEN	MATTE BLACK CARBON STEEL SPORTER	22	55,9	9.25	42.5	108,0	7.7	3,5	2.5 - 6 LBS.
52152	BOLT ACTION	6.5 CREEDMOOR	4	SYNTHETIC	OD GREEN	MATTE BLACK CARBON STEEL SPORTER	22	55,9	8	42.5	108,0	7.7	3,5	2.5 - 6 LBS.
52153	BOLT ACTION	7MM-08 REM	4	SYNTHETIC	OD GREEN	MATTE BLACK CARBON STEEL SPORTER	22	55,9	9.5	42.5	108,0	7.7	3,5	2.5 - 6 LBS.
52154	BOLT ACTION	308 WIN	4	SYNTHETIC	OD GREEN	MATTE BLACK CARBON STEEL SPORTER	22	55,9	10	42.5	108,0	7.7	3,5	2.5 - 6 LBS.
52155	BOLT ACTION	350 LEGEND	4	SYNTHETIC	OD GREEN	MATTE BLACK CARBON STEEL HEAVY SPORTER	18	45,7	16	38.5	97,8	7.2	3,3	2.5 - 6 LBS.
52156	BOLT ACTION	400 LEGEND	4	SYNTHETIC	OD GREEN	MATTE BLACK CARBON STEEL HEAVY SPORTER	20	50,8	16	40.5	102,9	7.5	3,4	2.5 - 6 LBS.
52157	BOLT ACTION	25-06 REM	4	SYNTHETIC	OD GREEN	MATTE BLACK CARBON STEEL SPORTER	22	55,9	10	42.5	108,0	7.7	3,5	2.5 - 6 LBS.
52158	BOLT ACTION	270 WIN	4	SYNTHETIC	OD GREEN	MATTE BLACK CARBON STEEL SPORTER	22	55,9	10	42.5	108,0	7.7	3,5	2.5 - 6 LBS.
52159	BOLT ACTION	30-06 SPFLD	4	SYNTHETIC	OD GREEN	MATTE BLACK CARBON STEEL SPORTER	22	55,9	10	42.5	108,0	7.7	3,5	2.5 - 6 LBS.
LEFT HAND MODELS														
52182	BOLT ACTION	223 REM	4	SYNTHETIC	OD GREEN	MATTE BLACK CARBON STEEL SPORTER	22	55,9	9	42.5	108,0	7.7	3,5	2.5 - 6 LBS.
52183	BOLT ACTION	22-250 REM	4	SYNTHETIC	OD GREEN	MATTE BLACK CARBON STEEL SPORTER	22	55,9	12	42.5	108,0	7.7	3,5	2.5 - 6 LBS.
52184	BOLT ACTION	243 WIN	4	SYNTHETIC	OD GREEN	MATTE BLACK CARBON STEEL SPORTER	22	55,9	9.25	42.5	108,0	7.7	3,5	2.5 - 6 LBS.
52185	BOLT ACTION	6.5 CREEDMOOR	4	SYNTHETIC	OD GREEN	MATTE BLACK CARBON STEEL SPORTER	22	55,9	8	42.5	108,0	7.7	3,5	2.5 - 6 LBS.
52186	BOLT ACTION	7MM-08 REM	4	SYNTHETIC	OD GREEN	MATTE BLACK CARBON STEEL SPORTER	22	55,9	9.5	42.5	108,0	7.7	3,5	2.5 - 6 LBS.
52187	BOLT ACTION	308 WIN	4	SYNTHETIC	OD GREEN	MATTE BLACK CARBON STEEL SPORTER	22	55,9	10	42.5	108,0	7.7	3,5	2.5 - 6 LBS.
52188	BOLT ACTION	350 LEGEND	4	SYNTHETIC	OD GREEN	MATTE BLACK CARBON STEEL HEAVY SPORTER	18	45,7	16	38.5	97,8	7.2	3,3	2.5 - 6 LBS.
52189	BOLT ACTION	400 LEGEND	4	SYNTHETIC	OD GREEN	MATTE BLACK CARBON STEEL HEAVY SPORTER	20	50,8	16	40.5	102,9	7.5	3,4	2.5 - 6 LBS.
52190	BOLT ACTION	25-06 REM	4	SYNTHETIC	OD GREEN	MATTE BLACK CARBON STEEL SPORTER	22	55,9	10	42.5	108,0	7.7	3,5	2.5 - 6 LBS.
52191	BOLT ACTION	270 WIN	4	SYNTHETIC	OD GREEN	MATTE BLACK CARBON STEEL SPORTER	22	55,9	10	42.5	108,0	7.7	3,5	2.5 - 6 LBS.
52192	BOLT ACTION	30-06 SPFLD	4	SYNTHETIC	OD GREEN	MATTE BLACK CARBON STEEL SPORTER	22	55,9	10	42.5	108,0	7.7	3,5	2.5 - 6 LBS.
COMPACT MODELS														
52215	BOLT ACTION	223 REM	4	SYNTHETIC	OD GREEN	MATTE BLACK CARBON STEEL SPORTER	20	50,8	9	39.5	100,3	7.5	3,4	2.5 - 6 LBS.
52216	BOLT ACTION	243 WIN	4	SYNTHETIC	OD GREEN	MATTE BLACK CARBON STEEL SPORTER	20	50,8	9.25	39.5	100,3	7.5	3,4	2.5 - 6 LBS.
52217	BOLT ACTION	6.5 CREEDMOOR	4	SYNTHETIC	OD GREEN	MATTE BLACK CARBON STEEL SPORTER	20	50,8	8	39.5	100,3	7.5	3,4	2.5 - 6 LBS.
52218	BOLT ACTION	7MM-08 REM	4	SYNTHETIC	OD GREEN	MATTE BLACK CARBON STEEL SPORTER	20	50,8	9.5	39.5	100,3	7.5	3,4	2.5 - 6 LBS.
52219	BOLT ACTION	308 WIN	4	SYNTHETIC	OD GREEN	MATTE BLACK CARBON STEEL SPORTER	20	50,8	10	39.5	100,3	7.5	3,4	2.5 - 6 LBS.
52220	BOLT ACTION	350 LEGEND	4	SYNTHETIC	OD GREEN	MATTE BLACK CARBON STEEL HEAVY SPORTER	18	45,7	16	37.5	95,3	7.1	3,2	2.5 - 6 LBS.
52221	BOLT ACTION	400 LEGEND	4	SYNTHETIC	OD GREEN	MATTE BLACK CARBON STEEL HEAVY SPORTER	20	50,8	16	39.5	100,3	7.4	3,4	2.5 - 6 LBS.
COMPACT LEFT HAND MODELS														
52236	BOLT ACTION	223 REM	4	SYNTHETIC	OD GREEN	MATTE BLACK CARBON STEEL SPORTER	20	50,8	9	39.5	100,3	7.5	3,4	2.5 - 6 LBS.
52237	BOLT ACTION	243 WIN	4	SYNTHETIC	OD GREEN	MATTE BLACK CARBON STEEL SPORTER	20	50,8	9.25	39.5	100,3	7.5	3,4	2.5 - 6 LBS.
52238	BOLT ACTION	6.5 CREEDMOOR	4	SYNTHETIC	OD GREEN	MATTE BLACK CARBON STEEL SPORTER	20	50,8	8	39.5	100,3	7.5	3,4	2.5 - 6 LBS.
52239	BOLT ACTION	7MM-08 REM	4	SYNTHETIC	OD GREEN	MATTE BLACK CARBON STEEL SPORTER	20	50,8	9.5	39.5	100,3	7.5	3,4	2.5 - 6 LBS.
52240	BOLT ACTION	308 WIN	4	SYNTHETIC	OD GREEN	MATTE BLACK CARBON STEEL SPORTER	20	50,8	10	39.5	100,3	7.5	3,4	2.5 - 6 LBS.
52241	BOLT ACTION	350 LEGEND	4	SYNTHETIC	OD GREEN	MATTE BLACK CARBON STEEL HEAVY SPORTER	18	45,7	16	37.5	95,3	7.1	3,2	2.5 - 6 LBS.
52242	BOLT ACTION	400 LEGEND	4	SYNTHETIC	OD GREEN	MATTE BLACK CARBON STEEL HEAVY SPORTER	20	50,8	16	39.5	100,3	7.4	3,4	2.5 - 6 LBS.

NEW//// AXIS 2 XP FDE

PART #	ACTION	CALIBER	ROUND CPTY	STOCK	STOCK COLOR	BARREL	BARREL LENGTH IN / CM		TWIST RATE	OVERALL LENGTH IN / CM		WEIGHT LB / KG		ACCUTRIGGER ADJ.
52160	BOLT ACTION	223 REM	4	SYNTHETIC	FDE	MATTE BLACK CARBON STEEL SPORTER	22	55,9	9	42.5	108,0	7.7	3,5	2.5 - 6 LBS.
52161	BOLT ACTION	22-250 REM	4	SYNTHETIC	FDE	MATTE BLACK CARBON STEEL SPORTER	22	55,9	12	42.5	108,0	7.7	3,5	2.5 - 6 LBS.
52162	BOLT ACTION	243 WIN	4	SYNTHETIC	FDE	MATTE BLACK CARBON STEEL SPORTER	22	55,9	9.25	42.5	108,0	7.7	3,5	2.5 - 6 LBS.
52163	BOLT ACTION	6.5 CREEDMOOR	4	SYNTHETIC	FDE	MATTE BLACK CARBON STEEL SPORTER	22	55,9	8	42.5	108,0	7.7	3,5	2.5 - 6 LBS.
52164	BOLT ACTION	7MM-08 REM	4	SYNTHETIC	FDE	MATTE BLACK CARBON STEEL SPORTER	22	55,9	9.5	42.5	108,0	7.7	3,5	2.5 - 6 LBS.
52165	BOLT ACTION	308 WIN	4	SYNTHETIC	FDE	MATTE BLACK CARBON STEEL SPORTER	22	55,9	10	42.5	108,0	7.7	3,5	2.5 - 6 LBS.
52166	BOLT ACTION	350 LEGEND	4	SYNTHETIC	FDE	MATTE BLACK CARBON STEEL HEAVY SPORTER	18	45,7	16	38.5	97,8	7.2	3,3	2.5 - 6 LBS.
52167	BOLT ACTION	400 LEGEND	4	SYNTHETIC	FDE	MATTE BLACK CARBON STEEL HEAVY SPORTER	20	50,8	16	40.5	102,9	7.5	3,4	2.5 - 6 LBS.
52168	BOLT ACTION	25-06 REM	4	SYNTHETIC	FDE	MATTE BLACK CARBON STEEL SPORTER	22	55,9	10	42.5	108,0	7.7	3,5	2.5 - 6 LBS.
52169	BOLT ACTION	270 WIN	4	SYNTHETIC	FDE	MATTE BLACK CARBON STEEL SPORTER	22	55,9	10	42.5	108,0	7.7	3,5	2.5 - 6 LBS.
52170	BOLT ACTION	30-06 SPFLD	4	SYNTHETIC	FDE	MATTE BLACK CARBON STEEL SPORTER	22	55,9	10	42.5	108,0	7.7	3,5	2.5 - 6 LBS.
LEFT HAND MODELS														
52193	BOLT ACTION	223 REM	4	SYNTHETIC	FDE	MATTE BLACK CARBON STEEL SPORTER	22	55,9	9	42.5	108,0	7.7	3,5	2.5 - 6 LBS.
52194	BOLT ACTION	22-250 REM	4	SYNTHETIC	FDE	MATTE BLACK CARBON STEEL SPORTER	22	55,9	12	42.5	108,0	7.7	3,5	2.5 - 6 LBS.
52195	BOLT ACTION	243 WIN	4	SYNTHETIC	FDE	MATTE BLACK CARBON STEEL SPORTER	22	55,9	9.25	42.5	108,0	7.7	3,5	2.5 - 6 LBS.
52196	BOLT ACTION	6.5 CREEDMOOR	4	SYNTHETIC	FDE	MATTE BLACK CARBON STEEL SPORTER	22	55,9	8	42.5	108,0	7.7	3,5	2.5 - 6 LBS.
52197	BOLT ACTION	7MM-08 REM	4	SYNTHETIC	FDE	MATTE BLACK CARBON STEEL SPORTER	22	55,9	9.5	42.5	108,0	7.7	3,5	2.5 - 6 LBS.
52198	BOLT ACTION	308 WIN	4	SYNTHETIC	FDE	MATTE BLACK CARBON STEEL SPORTER	22	55,9	10	42.5	108,0	7.7	3,5	2.5 - 6 LBS.
52199	BOLT ACTION	350 LEGEND	4	SYNTHETIC	FDE	MATTE BLACK CARBON STEEL HEAVY SPORTER	18	45,7	16	38.5	97,8	7.2	3,3	2.5 - 6 LBS.
52200	BOLT ACTION	400 LEGEND	4	SYNTHETIC	FDE	MATTE BLACK CARBON STEEL HEAVY SPORTER	20	50,8	16	40.5	102,9	7.5	3,4	2.5 - 6 LBS.
52201	BOLT ACTION	25-06 REM	4	SYNTHETIC	FDE	MATTE BLACK CARBON STEEL SPORTER	22	55,9	10	42.5	108,0	7.7	3,5	2.5 - 6 LBS.
52202	BOLT ACTION	270 WIN	4	SYNTHETIC	FDE	MATTE BLACK CARBON STEEL SPORTER	22	55,9	10	42.5	108,0	7.7	3,5	2.5 - 6 LBS.
52203	BOLT ACTION	30-06 SPFLD	4	SYNTHETIC	FDE	MATTE BLACK CARBON STEEL SPORTER	22	55,9	10	42.5	108,0	7.7	3,5	2.5 - 6 LBS.
COMPACT MODELS														
52222	BOLT ACTION	223 REM	4	SYNTHETIC	FDE	MATTE BLACK CARBON STEEL SPORTER	20	50,8	9	39.5	100,3	7.5	3,4	2.5 - 6 LBS.
52223	BOLT ACTION	243 WIN	4	SYNTHETIC	FDE	MATTE BLACK CARBON STEEL SPORTER	20	50,8	9.25	39.5	100,3	7.5	3,4	2.5 - 6 LBS.
52224	BOLT ACTION	6.5 CREEDMOOR	4	SYNTHETIC	FDE	MATTE BLACK CARBON STEEL SPORTER	20	50,8	8	39.5	100,3	7.5	3,4	2.5 - 6 LBS.
52225	BOLT ACTION	7MM-08 REM	4	SYNTHETIC	FDE	MATTE BLACK CARBON STEEL SPORTER	20	50,8	9.5	39.5	100,3	7.5	3,4	2.5 - 6 LBS.
52226	BOLT ACTION	308 WIN	4	SYNTHETIC	FDE	MATTE BLACK CARBON STEEL SPORTER	20	50,8	10	39.5	100,3	7.5	3,4	2.5 - 6 LBS.
52227	BOLT ACTION	350 LEGEND	4	SYNTHETIC	FDE	MATTE BLACK CARBON STEEL HEAVY SPORTER	18	45,7	16	37.5	95,3	7.1	3,2	2.5 - 6 LBS.
52228	BOLT ACTION	400 LEGEND	4	SYNTHETIC	FDE	MATTE BLACK CARBON STEEL HEAVY SPORTER	20	50,8	16	39.5	100,3	7.4	3,4	2.5 - 6 LBS.
COMPACT LEFT HAND MODELS														
52243	BOLT ACTION	223 REM	4	SYNTHETIC	FDE	MATTE BLACK CARBON STEEL SPORTER	20	50,8	9	39.5	100,3	7.5	3,4	2.5 - 6 LBS.
52244	BOLT ACTION	243 WIN	4	SYNTHETIC	FDE	MATTE BLACK CARBON STEEL SPORTER	20	50,8	9.25	39.5	100,3	7.5	3,4	2.5 - 6 LBS.
52245	BOLT ACTION	6.5 CREEDMOOR	4	SYNTHETIC	FDE	MATTE BLACK CARBON STEEL SPORTER	20	50,8	8	39.5	100,3	7.5	3,4	2.5 - 6 LBS.
52246	BOLT ACTION	7MM-08 REM	4	SYNTHETIC	FDE	MATTE BLACK CARBON STEEL SPORTER	20	50,8	9.5	39.5	100,3	7.5	3,4	2.5 - 6 LBS.
52247	BOLT ACTION	308 WIN	4	SYNTHETIC	FDE	MATTE BLACK CARBON STEEL SPORTER	20	50,8	10	39.5	100,3	7.5	3,4	2.5 - 6 LBS.
52248	BOLT ACTION	350 LEGEND	4	SYNTHETIC	FDE	MATTE BLACK CARBON STEEL HEAVY SPORTER	18	45,7	16	37.5	95,3	7.1	3,2	2.5 - 6 LBS.
52249	BOLT ACTION	400 LEGEND	4	SYNTHETIC	FDE	MATTE BLACK CARBON STEEL HEAVY SPORTER	20	50,8	16	39.5	100,3	7.4	3,4	2.5 - 6 LBS.

SAVAGE®

SPECIFICATIONS SUBJECT TO CHANGE WITHOUT NOTICE.

NEW//// AXIS 2 XP GRAY

PART #	ACTION	CALIBER	ROUND CPTY	STOCK	STOCK COLOR	BARREL	BARREL LENGTH IN / CM		TWIST RATE	OVERALL LENGTH IN / CM		WEIGHT LB / KG		ACCUTRIGGER ADJ.
52171	BOLT ACTION	223 REM	4	SYNTHETIC	GRAY	MATTE BLACK CARBON STEEL SPORTER	22	55,9	9	42.5	108,0	7.7	3,5	2.5 - 6 LBS.
52172	BOLT ACTION	22-250 REM	4	SYNTHETIC	GRAY	MATTE BLACK CARBON STEEL SPORTER	22	55,9	12	42.5	108,0	7.7	3,5	2.5 - 6 LBS.
52173	BOLT ACTION	243 WIN	4	SYNTHETIC	GRAY	MATTE BLACK CARBON STEEL SPORTER	22	55,9	9.25	42.5	108,0	7.7	3,5	2.5 - 6 LBS.
52174	BOLT ACTION	6.5 CREEDMOOR	4	SYNTHETIC	GRAY	MATTE BLACK CARBON STEEL SPORTER	22	55,9	8	42.5	108,0	7.7	3,5	2.5 - 6 LBS.
52175	BOLT ACTION	7MM-08 REM	4	SYNTHETIC	GRAY	MATTE BLACK CARBON STEEL SPORTER	22	55,9	9.5	42.5	108,0	7.7	3,5	2.5 - 6 LBS.
52176	BOLT ACTION	308 WIN	4	SYNTHETIC	GRAY	MATTE BLACK CARBON STEEL SPORTER	22	55,9	10	42.5	108,0	7.7	3,5	2.5 - 6 LBS.
52177	BOLT ACTION	350 LEGEND	4	SYNTHETIC	GRAY	MATTE BLACK CARBON STEEL HEAVY SPORTER	18	45,7	16	38.5	97,8	7.2	3,3	2.5 - 6 LBS.
52178	BOLT ACTION	400 LEGEND	4	SYNTHETIC	GRAY	MATTE BLACK CARBON STEEL HEAVY SPORTER	20	50,8	16	40.5	102,9	7.5	3,4	2.5 - 6 LBS.
52179	BOLT ACTION	25-06 REM	4	SYNTHETIC	GRAY	MATTE BLACK CARBON STEEL SPORTER	22	55,9	10	42.5	108,0	7.7	3,5	2.5 - 6 LBS.
52180	BOLT ACTION	270 WIN	4	SYNTHETIC	GRAY	MATTE BLACK CARBON STEEL SPORTER	22	55,9	10	42.5	108,0	7.7	3,5	2.5 - 6 LBS.
52181	BOLT ACTION	30-06 SPFLD	4	SYNTHETIC	GRAY	MATTE BLACK CARBON STEEL SPORTER	22	55,9	10	42.5	108,0	7.7	3,5	2.5 - 6 LBS.
LEFT HAND MODELS														
52204	BOLT ACTION	223 REM	4	SYNTHETIC	GRAY	MATTE BLACK CARBON STEEL SPORTER	22	55,9	9	42.5	108,0	7.7	3,5	2.5 - 6 LBS.
52205	BOLT ACTION	22-250 REM	4	SYNTHETIC	GRAY	MATTE BLACK CARBON STEEL SPORTER	22	55,9	12	42.5	108,0	7.7	3,5	2.5 - 6 LBS.
52206	BOLT ACTION	243 WIN	4	SYNTHETIC	GRAY	MATTE BLACK CARBON STEEL SPORTER	22	55,9	9.25	42.5	108,0	7.7	3,5	2.5 - 6 LBS.
52207	BOLT ACTION	6.5 CREEDMOOR	4	SYNTHETIC	GRAY	MATTE BLACK CARBON STEEL SPORTER	22	55,9	8	42.5	108,0	7.7	3,5	2.5 - 6 LBS.
52208	BOLT ACTION	7MM-08 REM	4	SYNTHETIC	GRAY	MATTE BLACK CARBON STEEL SPORTER	22	55,9	9.5	42.5	108,0	7.7	3,5	2.5 - 6 LBS.
52209	BOLT ACTION	308 WIN	4	SYNTHETIC	GRAY	MATTE BLACK CARBON STEEL SPORTER	22	55,9	10	42.5	108,0	7.7	3,5	2.5 - 6 LBS.
52210	BOLT ACTION	350 LEGEND	4	SYNTHETIC	GRAY	MATTE BLACK CARBON STEEL HEAVY SPORTER	18	45,7	16	38.5	97,8	7.2	3,3	2.5 - 6 LBS.
52211	BOLT ACTION	400 LEGEND	4	SYNTHETIC	GRAY	MATTE BLACK CARBON STEEL HEAVY SPORTER	20	50,8	16	40.5	102,9	7.5	3,4	2.5 - 6 LBS.
52212	BOLT ACTION	25-06 REM	4	SYNTHETIC	GRAY	MATTE BLACK CARBON STEEL SPORTER	22	55,9	10	42.5	108,0	7.7	3,5	2.5 - 6 LBS.
52213	BOLT ACTION	270 WIN	4	SYNTHETIC	GRAY	MATTE BLACK CARBON STEEL SPORTER	22	55,9	10	42.5	108,0	7.7	3,5	2.5 - 6 LBS.
52214	BOLT ACTION	30-06 SPFLD	4	SYNTHETIC	GRAY	MATTE BLACK CARBON STEEL SPORTER	22	55,9	10	42.5	108,0	7.7	3,5	2.5 - 6 LBS.
COMPACT MODELS														
52229	BOLT ACTION	223 REM	4	SYNTHETIC	GRAY	MATTE BLACK CARBON STEEL SPORTER	20	50,8	9	39.5	100,3	7.5	3,4	2.5 - 6 LBS.
52230	BOLT ACTION	243 WIN	4	SYNTHETIC	GRAY	MATTE BLACK CARBON STEEL SPORTER	20	50,8	9.25	39.5	100,3	7.5	3,4	2.5 - 6 LBS.
52231	BOLT ACTION	6.5 CREEDMOOR	4	SYNTHETIC	GRAY	MATTE BLACK CARBON STEEL SPORTER	20	50,8	8	39.5	100,3	7.5	3,4	2.5 - 6 LBS.
52232	BOLT ACTION	7MM-08 REM	4	SYNTHETIC	GRAY	MATTE BLACK CARBON STEEL SPORTER	20	50,8	9.5	39.5	100,3	7.5	3,4	2.5 - 6 LBS.
52233	BOLT ACTION	308 WIN	4	SYNTHETIC	GRAY	MATTE BLACK CARBON STEEL SPORTER	20	50,8	10	39.5	100,3	7.5	3,4	2.5 - 6 LBS.
52234	BOLT ACTION	350 LEGEND	4	SYNTHETIC	GRAY	MATTE BLACK CARBON STEEL HEAVY SPORTER	18	45,7	16	37.5	95,3	7.1	3,2	2.5 - 6 LBS.
52235	BOLT ACTION	400 LEGEND	4	SYNTHETIC	GRAY	MATTE BLACK CARBON STEEL HEAVY SPORTER	20	50,8	16	39.5	100,3	7.4	3,4	2.5 - 6 LBS.
COMPACT LEFT HAND MODELS														
52250	BOLT ACTION	223 REM	4	SYNTHETIC	GRAY	MATTE BLACK CARBON STEEL SPORTER	20	50,8	9	39.5	100,3	7.5	3,4	2.5 - 6 LBS.
52251	BOLT ACTION	243 WIN	4	SYNTHETIC	GRAY	MATTE BLACK CARBON STEEL SPORTER	20	50,8	9.25	39.5	100,3	7.5	3,4	2.5 - 6 LBS.
52252	BOLT ACTION	6.5 CREEDMOOR	4	SYNTHETIC	GRAY	MATTE BLACK CARBON STEEL SPORTER	20	50,8	8	39.5	100,3	7.5	3,4	2.5 - 6 LBS.
52253	BOLT ACTION	7MM-08 REM	4	SYNTHETIC	GRAY	MATTE BLACK CARBON STEEL SPORTER	20	50,8	9.5	39.5	100,3	7.5	3,4	2.5 - 6 LBS.
52254	BOLT ACTION	308 WIN	4	SYNTHETIC	GRAY	MATTE BLACK CARBON STEEL SPORTER	20	50,8	10	39.5	100,3	7.5	3,4	2.5 - 6 LBS.
52255	BOLT ACTION	350 LEGEND	4	SYNTHETIC	GRAY	MATTE BLACK CARBON STEEL HEAVY SPORTER	18	45,7	16	37.5	95,3	7.1	3,2	2.5 - 6 LBS.
52256	BOLT ACTION	400 LEGEND	4	SYNTHETIC	GRAY	MATTE BLACK CARBON STEEL HEAVY SPORTER	20	50,8	16	39.5	100,3	7.4	3,4	2.5 - 6 LBS.

NEW//// AXIS 2 XP HARDWOOD

PART #	ACTION	CALIBER	ROUND CPTY	STOCK	STOCK COLOR	BARREL	BARREL LENGTH IN / CM		TWIST RATE	OVERALL LENGTH IN / CM		WEIGHT LB / KG		ACCUTRIGGER ADJ.
52257	BOLT ACTION	223 REM	4	HARDWOOD	BROWN	MATTE BLACK CARBON STEEL SPORTER	22	55,9	9	42.5	108,0	7.8	3,5	2.5 - 6 LBS.
52258	BOLT ACTION	22-250 REM	4	HARDWOOD	BROWN	MATTE BLACK CARBON STEEL SPORTER	22	55,9	12	42.5	108,0	7.8	3,5	2.5 - 6 LBS.
52259	BOLT ACTION	243 WIN	4	HARDWOOD	BROWN	MATTE BLACK CARBON STEEL SPORTER	22	55,9	9.25	42.5	108,0	7.8	3,5	2.5 - 6 LBS.
52260	BOLT ACTION	6.5 CM	4	HARDWOOD	BROWN	MATTE BLACK CARBON STEEL SPORTER	22	55,9	8	42.5	108,0	7.8	3,5	2.5 - 6 LBS.
52261	BOLT ACTION	7MM-08 REM	4	HARDWOOD	BROWN	MATTE BLACK CARBON STEEL SPORTER	22	55,9	9.5	42.5	108,0	7.8	3,5	2.5 - 6 LBS.
52262	BOLT ACTION	308 WIN	4	HARDWOOD	BROWN	MATTE BLACK CARBON STEEL SPORTER	22	55,9	10	42.5	108,0	7.8	3,5	2.5 - 6 LBS.
52263	BOLT ACTION	350 LEGEND	4	HARDWOOD	BROWN	MATTE BLACK CARBON STEEL HEAVY SPORTER	18	45,7	16	38.5	97,8	7.3	3,3	2.5 - 6 LBS.
52264	BOLT ACTION	400 LEGEND	4	HARDWOOD	BROWN	MATTE BLACK CARBON STEEL HEAVY SPORTER	20	50,8	16	40.5	102,9	7.6	3,5	2.5 - 6 LBS.
52265	BOLT ACTION	25-06 REM	4	HARDWOOD	BROWN	MATTE BLACK CARBON STEEL SPORTER	22	55,9	10	42.5	108,0	7.8	3,5	2.5 - 6 LBS.
52266	BOLT ACTION	270 WIN	4	HARDWOOD	BROWN	MATTE BLACK CARBON STEEL SPORTER	22	55,9	10	42.5	108,0	7.8	3,5	2.5 - 6 LBS.
52267	BOLT ACTION	30-06 SPFLD	4	HARDWOOD	BROWN	MATTE BLACK CARBON STEEL SPORTER	22	55,9	10	42.5	108,0	7.8	3,5	2.5 - 6 LBS.
LEFT HAND MODELS														
52268	BOLT ACTION	223 REM	4	HARDWOOD	BROWN	MATTE BLACK CARBON STEEL SPORTER	22	55,9	9	42.5	108,0	7.8	3,5	2.5 - 6 LBS.
52269	BOLT ACTION	22-250 REM	4	HARDWOOD	BROWN	MATTE BLACK CARBON STEEL SPORTER	22	55,9	12	42.5	108,0	7.8	3,5	2.5 - 6 LBS.
52270	BOLT ACTION	243 WIN	4	HARDWOOD	BROWN	MATTE BLACK CARBON STEEL SPORTER	22	55,9	9.25	42.5	108,0	7.8	3,5	2.5 - 6 LBS.
52271	BOLT ACTION	6.5 CM	4	HARDWOOD	BROWN	MATTE BLACK CARBON STEEL SPORTER	22	55,9	8	42.5	108,0	7.8	3,5	2.5 - 6 LBS.
52272	BOLT ACTION	7MM-08 REM	4	HARDWOOD	BROWN	MATTE BLACK CARBON STEEL SPORTER	22	55,9	9.5	42.5	108,0	7.8	3,5	2.5 - 6 LBS.
52273	BOLT ACTION	308 WIN	4	HARDWOOD	BROWN	MATTE BLACK CARBON STEEL SPORTER	22	55,9	10	42.5	108,0	7.8	3,5	2.5 - 6 LBS.
52274	BOLT ACTION	350 LEGEND	4	HARDWOOD	BROWN	MATTE BLACK CARBON STEEL HEAVY SPORTER	18	45,7	16	38.5	97,8	7.3	3,3	2.5 - 6 LBS.
52275	BOLT ACTION	400 LEGEND	4	HARDWOOD	BROWN	MATTE BLACK CARBON STEEL HEAVY SPORTER	20	50,8	16	40.5	102,9	7.6	3,5	2.5 - 6 LBS.
52276	BOLT ACTION	25-06 REM	4	HARDWOOD	BROWN	MATTE BLACK CARBON STEEL SPORTER	22	55,9	10	42.5	108,0	7.8	3,5	2.5 - 6 LBS.
52277	BOLT ACTION	270 WIN	4	HARDWOOD	BROWN	MATTE BLACK CARBON STEEL SPORTER	22	55,9	10	42.5	108,0	7.8	3,5	2.5 - 6 LBS.
52278	BOLT ACTION	30-06 SPFLD	4	HARDWOOD	BROWN	MATTE BLACK CARBON STEEL SPORTER	22	55,9	10	42.5	108,0	7.8	3,5	2.5 - 6 LBS.

SAVAGE

2025

AXIS XP

Introducing the redesigned AXIS, the next evolution of an iconic Savage rifle. Featuring an ergonomic stock design, sleek bolt handle, and reliable action, the new AXIS shoots just as good as it looks. When you need reliability and accuracy out of the box, reach for a rifle with a proven legacy. Reach for the Savage AXIS.

Look for the AXIS XP in full-size, compact, left-hand, optics package, along with a complete spectrum of popular hunting calibers – there is an AXIS for everyone.

- Carbon steel barreled action
- Smooth, reliable bolt action
- Black synthetic stock
- Compact and Left hand models
- Precision button-rifled barrel
- Detachable box magazine
- Modern design with contoured grips and fore-end
- Recessed sling studs

SAVAGE®

SPECIFICATIONS SUBJECT TO CHANGE WITHOUT NOTICE.

AXIS XP

11 CALIBERS // **4** MODELS

- 223 REM
- 22-250 REM
- 243 WIN
- 25-06 REM
- 6.5 CREEDMOOR
- 270 WIN
- 7MM-08 REM
- 308 WIN
- 30-06 SPFLD
- 350 LEGEND
- 400 LEGEND

REDESIGNED BOLT HANDLE

3-9X40MM SCOPE

2025

AXIS XP

NEW//// AXIS XP

PART #	ACTION	CALIBER	ROUND CPTY	STOCK	STOCK COLOR	BARREL	BARREL LENGTH IN / CM		TWIST RATE	OVERALL LENGTH IN / CM		WEIGHT LB / KG	
52001	BOLT	223 REM	4	SYNTHETIC	BLACK	MATTE BLACK CARBON STEEL SPORTER	22	55,9	9	42.5	108,0	7.6	3,5
52002	BOLT	22-250 REM	4	SYNTHETIC	BLACK	MATTE BLACK CARBON STEEL SPORTER	22	55,9	12	42.5	108,0	7.6	3,5
52003	BOLT	243 WIN	4	SYNTHETIC	BLACK	MATTE BLACK CARBON STEEL SPORTER	22	55,9	9.25	42.5	108,0	7.6	3,5
52004	BOLT	6.5 CREEDMOOR	4	SYNTHETIC	BLACK	MATTE BLACK CARBON STEEL SPORTER	22	55,9	8	42.5	108,0	7.6	3,5
52005	BOLT	7MM-08 REM	4	SYNTHETIC	BLACK	MATTE BLACK CARBON STEEL SPORTER	22	55,9	9.5	42.5	108,0	7.6	3,5
52006	BOLT	308 WIN	4	SYNTHETIC	BLACK	MATTE BLACK CARBON STEEL SPORTER	22	55,9	10	42.5	108,0	7.6	3,5
52007	BOLT	350 LEGEND	4	SYNTHETIC	BLACK	MATTE BLACK CARBON STEEL HEAVY SPORTER	18	45,7	16	38.5	97,8	7.1	3,2
52008	BOLT	400 LEGEND	4	SYNTHETIC	BLACK	MATTE BLACK CARBON STEEL HEAVY SPORTER	20	50,8	16	40.5	108,0	7.4	3,4
52009	BOLT	25-06 REM	4	SYNTHETIC	BLACK	MATTE BLACK CARBON STEEL SPORTER	22	55,9	10	42.5.	108,0	7.6	3,5
52010	BOLT	270 WIN	4	SYNTHETIC	BLACK	MATTE BLACK CARBON STEEL SPORTER	22	55,9	10	42.5	108,0	7.6	3,5
52011	BOLT	30-06 SPFLD	4	SYNTHETIC	BLACK	MATTE BLACK CARBON STEEL SPORTER	22	55,9	10	42.5	108,0	7.6	3,5
LEFT HAND MODELS													
52012	BOLT	223 REM	4	SYNTHETIC	BLACK	MATTE BLACK CARBON STEEL SPORTER	22	55,9	9	42.5	108,0	7.6	3,5
52013	BOLT	22-250 REM	4	SYNTHETIC	BLACK	MATTE BLACK CARBON STEEL SPORTER	22	55,9	12	42.5	108,0	7.6	3,5
52014	BOLT	243 WIN	4	SYNTHETIC	BLACK	MATTE BLACK CARBON STEEL SPORTER	22	55,9	9.25	42.5	108,0	7.6	3,5
52015	BOLT	6.5 CREEDMOOR	4	SYNTHETIC	BLACK	MATTE BLACK CARBON STEEL SPORTER	22	55,9	8	42.5	108,0	7.6	3,5
52016	BOLT	7MM-08 REM	4	SYNTHETIC	BLACK	MATTE BLACK CARBON STEEL SPORTER	22	55,9	9.5	42.5	108,0	7.6	3,5
52017	BOLT	308 WIN	4	SYNTHETIC	BLACK	MATTE BLACK CARBON STEEL SPORTER	22	55,9	10	42.5	108,0	7.6	3,5
52018	BOLT	350 LEGEND	4	SYNTHETIC	BLACK	MATTE BLACK CARBON STEEL HEAVY SPORTER	18	45,7	16	38.5	97,8	7.6	3,5
52019	BOLT	400 LEGEND	4	SYNTHETIC	BLACK	MATTE BLACK CARBON STEEL HEAVY SPORTER	20	50,8	16	40.5	108,0	7.6	3,5
52020	BOLT	25-06 REM	4	SYNTHETIC	BLACK	MATTE BLACK CARBON STEEL SPORTER	22	55,9	10	42.5	108,0	7.6	3,5
52021	BOLT	270 WIN	4	SYNTHETIC	BLACK	MATTE BLACK CARBON STEEL SPORTER	22	55,9	10	42.5	108,0	7.6	3,5
52022	BOLT	30-06 SPFLD	4	SYNTHETIC	BLACK	MATTE BLACK CARBON STEEL SPORTER	22	55,9	10	42.5	108,0	7.6	3,5
COMPACT MODELS													
52023	BOLT	223 REM	4	SYNTHETIC	BLACK	MATTE BLACK CARBON STEEL SPORTER	20	50,8	9	39.5	100,3	7.4	3,4
52024	BOLT	243 WIN	4	SYNTHETIC	BLACK	MATTE BLACK CARBON STEEL SPORTER	20	50,8	9.25	39.5	100,3	7.4	3,4
52025	BOLT	6.5 CREEDMOOR	4	SYNTHETIC	BLACK	MATTE BLACK CARBON STEEL SPORTER	20	50,8	8	39.5	100,3	7.4	3,4
52026	BOLT	7MM-08 REM	4	SYNTHETIC	BLACK	MATTE BLACK CARBON STEEL SPORTER	20	50,8	9.5	39.5	100,3	7.4	3,4
52027	BOLT	308 WIN	4	SYNTHETIC	BLACK	MATTE BLACK CARBON STEEL SPORTER	20	50,8	10	39.5	100,3	7.4	3,4
52028	BOLT	350 LEGEND	4	SYNTHETIC	BLACK	MATTE BLACK CARBON STEEL HEAVY SPORTER	18	45,7	16	37.5	95,3	7.0	3,2
52029	BOLT	400 LEGEND	4	SYNTHETIC	BLACK	MATTE BLACK CARBON STEEL HEAVY SPORTER	20	50,8	16	39.5	100,3	7.3	3,3
COMPACT LEFT HAND MODELS													
52030	BOLT	223 REM	4	SYNTHETIC	BLACK	MATTE BLACK CARBON STEEL SPORTER	20	50,8	9	39.5	100,3	7.4	3,4
52031	BOLT	243 WIN	4	SYNTHETIC	BLACK	MATTE BLACK CARBON STEEL SPORTER	20	50,8	9.25	39.5	100,3	7.4	3,4
52032	BOLT	6.5 CREEDMOOR	4	SYNTHETIC	BLACK	MATTE BLACK CARBON STEEL SPORTER	20	50,8	8	39.5	100,3	7.4	3,4
52033	BOLT	7MM-08 REM	4	SYNTHETIC	BLACK	MATTE BLACK CARBON STEEL SPORTER	20	50,8	9.5	39.5	100,3	7.4	3,4
52034	BOLT	308 WIN	4	SYNTHETIC	BLACK	MATTE BLACK CARBON STEEL SPORTER	20	50,8	10	39.5	100,3	7.4	3,4
52035	BOLT	350 LEGEND	4	SYNTHETIC	BLACK	MATTE BLACK CARBON STEEL HEAVY SPORTER	18	45,7	16	37.5	95,3	7.0	3,2
52036	BOLT	400 LEGEND	4	SYNTHETIC	BLACK	MATTE BLACK CARBON STEEL HEAVY SPORTER	20	50,8	16	39.5	100,3	7.3	3,3

NOTES

2025

MODEL 334

Where value and performance meet, is where the Model 334 bolt action rifle excels. The rifle features a crisp trigger and a 60-degree bolt lift to allow faster loading on follow-up shots. The barrel is free-floating and button rifled for consistent accuracy. Offered in three popular calibers, the Savage Model 334 is available in a Turkish Walnut stock option with a silver bolt or a black synthetic stock with a matte black action to match.

- 3-Position safety
- Crisp trigger
- 60 Degree Bolt Lift with 3-Locking Lugs
- Ergonomic stock and recoil pad
- Matte Black synthetic stock, Turkish Walnut stock or camo stock options
- 3-Round detachable box magazine
- Matte black carbon steel receiver with integrated recoil lug
- Includes a one piece scope rail
- Free-floating, Button Rifled, Carbon Steel Barrel with 11° Target Crown
- 2-Sling Swivel Studs

SAVAGE®

SPECIFICATIONS SUBJECT TO CHANGE WITHOUT NOTICE.

MODEL 334

5 CALIBERS // **3** MODELS

- 308 WIN
- 6.5 CREEDMOOR
- 243 WIN
- 270 WIN
- 30-06 SPFLD

CAMO STOCK

SYNTHETIC STOCK

WALNUT STOCK

MODEL 334

NEW//// 334 CAMO

PART #	ACTION	GAUGE	ROUND CPTY	STOCK	STOCK COLOR	BARREL	TWIST RATE	BARREL LENGTH IN / CM		OVERALL LENGTH IN / CM		WEIGHT LB / KG	
19456	BOLT	243 WIN	3	SYNTHETIC	MOSSY OAK TERRA GILA	DARK GRAY CERAKOTE CARBON STEEL	10	20	50,8	41	104,1	7.2	3,3
19466	BOLT	6.5 CREEDMOOR	3	SYNTHETIC	MOSSY OAK TERRA GILA	DARK GRAY CERAKOTE CARBON STEEL	8	22	55,9	43	109,2	7.2	3,3
19467	BOLT	308 WIN	3	SYNTHETIC	MOSSY OAK TERRA GILA	DARK GRAY CERAKOTE CARBON STEEL	11	20	50,8	41	104,1	7.2	3,3
19479	BOLT	270 WIN	3	SYNTHETIC	MOSSY OAK TERRA GILA	DARK GRAY CERAKOTE CARBON STEEL	10	20	50,8	41	104,1	7.2	3,3
19509	BOLT	30-06 SPFLD	3	SYNTHETIC	MOSSY OAK TERRA GILA	DARK GRAY CERAKOTE CARBON STEEL	10	20	50,8	41	104,1	7.2	3,3

334 SYNTHETIC

	PART #	ACTION	GAUGE	ROUND CPTY	STOCK	STOCK COLOR	BARREL	TWIST RATE	BARREL LENGTH IN / CM		OVERALL LENGTH IN / CM		WEIGHT LB / KG	
	18823	BOLT	308 WIN	3	SYNTHETIC	BLACK	MATTE BLACK CARBON STEEL	11	20	50,8	41	104,1	7.2	3,3
	18837	BOLT	6.5 CREEDMOOR	3	SYNTHETIC	BLACK	MATTE BLACK CARBON STEEL	8	22	55,8	43	109,2	7.4	3,4
	18824	BOLT	243 WIN	3	SYNTHETIC	BLACK	MATTE BLACK CARBON STEEL	10	20	50,8	41	104,1	7.2	3,3
NEW	18939	BOLT	30-06 SPFLD	3	SYNTHETIC	BLACK	MATTE BLACK CARBON STEEL	10	20	50,8	41	104,1	7.4	3,4
NEW	18993	BOLT	270 WIN	3	SYNTHETIC	BLACK	MATTE BLACK CARBON STEEL	10	20	50,8	41	104,1	7.4	3,4

334 WALNUT

	PART #	ACTION	GAUGE	ROUND CPTY	STOCK	STOCK COLOR	BARREL	TWIST RATE	BARREL LENGTH IN / CM		OVERALL LENGTH IN / CM		WEIGHT LB / KG	
	18838	BOLT	308 WIN	3	TURKISH WALNUT	BROWN	MATTE BLACK CARBON STEEL	11	20	50,8	41	104,1	7.2	3,3
	18858	BOLT	6.5 CREEDMOOR	3	TURKISH WALNUT	BROWN	MATTE BLACK CARBON STEEL	8	22	55,8	43	109,2	7.4	3,4
	18839	BOLT	243 WIN	3	TURKISH WALNUT	BROWN	MATTE BLACK CARBON STEEL	10	20	50,8	41	104,1	7.2	3,3
NEW	18940	BOLT	30-06 SPFLD	3	TURKISH WALNUT	BROWN	MATTE BLACK CARBON STEEL	10	20	50,8	41.25	104,1	7.4	3,4
NEW	19059	BOLT	270 WIN	3	TURKISH WALNUT	BROWN	MATTE BLACK CARBON STEEL	10	20	50,8	41.25	104,1	7.4	3,4

SAVAGE

2025

LONG RANGE

Extend your maximum effective range with our Long Range Series rifles. We put everything we have into building these modern rifles with our most advanced technologies to give shooters the ultimate edge.

- User-adjustable AccuTrigger™
- Precision button-rifled barrels receivers and barrels machined from barstock
- Savage factory blueprinted action *(select models)*
- Threaded barrels (5/8x24) (223 REM 1/2x28)

SAVAGE®

SPECIFICATIONS SUBJECT TO CHANGE WITHOUT NOTICE.

11 CALIBERS // 7 MODELS

- 223 REM
- 243 WIN
- 6MM CREEDMOOR
- 6.5 CREEDMOOR
- 6.5 PRC
- 270 WIN
- 308 WIN
- 30-06 SPFLD
- 300 WIN MAG
- 300 PRC
- 338 LAPUA

ADJUSTABLE ACCUTRIGGER

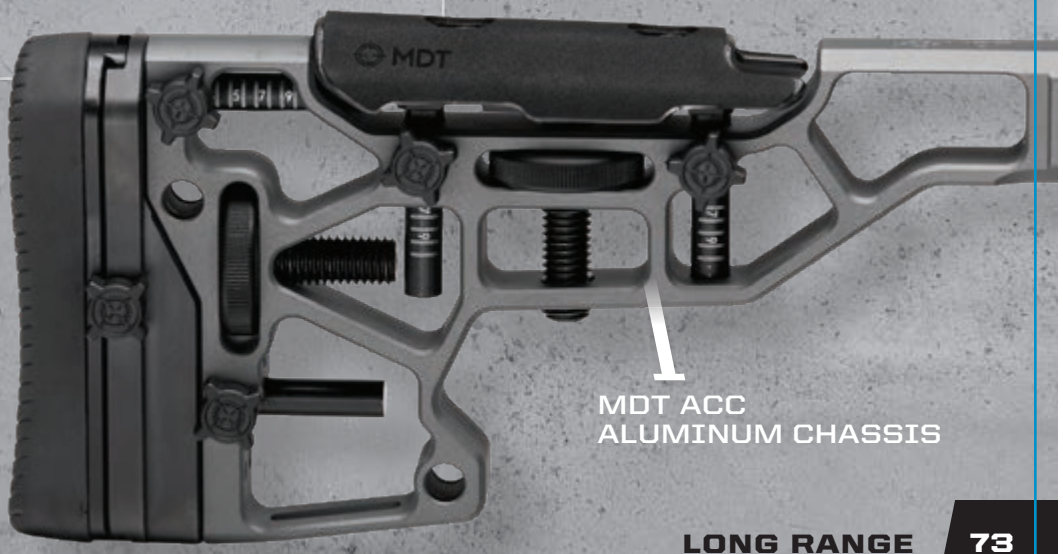

MDT ACC ALUMINUM CHASSIS

2025

LONG RANGE

NO MUZZLE BRAKE ON 30" BARRELED MODELS

110 ELITE PRECISION

PART #	ACTION	CALIBER	ROUND CPTY	STOCK	STOCK COLOR	BARREL	BARREL LENGTH IN / CM		TWIST RATE	OVERALL LENGTH IN / CM		WEIGHT LB / KG		ACCUTRIGGER ADJ.
56073	BOLT	223 REM	10	MDT ACC ALUMINUM CHASSIS	GRAY CERAKOTE	STAINLESS STEEL	26	66,0	7	43.0	109,2	12.6	5,7	1.5-4 LBS
56074	BOLT	308 WIN	10	MDT ACC ALUMINUM CHASSIS	GRAY CERAKOTE	STAINLESS STEEL	26	66,0	10	43.0	109,2	12.6	5,7	1.5-4 LBS
56075	BOLT	6.5 CREEDMOOR	10	MDT ACC ALUMINUM CHASSIS	GRAY CERAKOTE	STAINLESS STEEL	26	66,0	8	43.0	109,2	12.6	5,7	1.5-4 LBS
56076	BOLT	6MM CREEDMOOR	10	MDT ACC ALUMINUM CHASSIS	GRAY CERAKOTE	STAINLESS STEEL	26	66,0	7.5	43.0	109,2	12.6	5,7	1.5-4 LBS
56077	BOLT	300 WIN MAG	5	MDT ACC ALUMINUM CHASSIS	GRAY CERAKOTE	STAINLESS STEEL	30	76,2	10	49.8	126,4	15.0	6,8	1.5-4 LBS
56079	BOLT	300 PRC	5	MDT ACC ALUMINUM CHASSIS	GRAY CERAKOTE	STAINLESS STEEL	30	76,2	8.5	49.8	126,4	15.0	6,8	1.5-4 LBS
56080	BOLT	338 LAPUA	5	MDT ACC ALUMINUM CHASSIS	GRAY CERAKOTE	STAINLESS STEEL	30	76,2	9	49.8	126,4	15.0	6,8	1.5-4 LBS
LEFT HAND MODELS														
56150	BOLT	223 REM	10	MDT ACC ALUMINUM CHASSIS	GRAY CERAKOTE	STAINLESS STEEL	26	66,0	7	43.0	109,2	12.6	5,7	1.5-4 LBS
56151	BOLT	308 WIN	10	MDT ACC ALUMINUM CHASSIS	GRAY CERAKOTE	STAINLESS STEEL	26	66,0	10	43.0	109,2	12.6	5,7	1.5-4 LBS
56152	BOLT	6.5 CREEDMOOR	10	MDT ACC ALUMINUM CHASSIS	GRAY CERAKOTE	STAINLESS STEEL	26	66,0	8	43.0	109,2	12.6	5,7	1.5-4 LBS
56153	BOLT	6MM CREEDMOOR	10	MDT ACC ALUMINUM CHASSIS	GRAY CERAKOTE	STAINLESS STEEL	26	66,0	7.5	43.0	109,2	12.6	5,7	1.5-4 LBS
56154	BOLT	300 WIN MAG	5	MDT ACC ALUMINUM CHASSIS	GRAY CERAKOTE	STAINLESS STEEL	30	76,2	10	49.8	126,4	15.0	6,8	1.5-4 LBS
56156	BOLT	300 PRC	5	MDT ACC ALUMINUM CHASSIS	GRAY CERAKOTE	STAINLESS STEEL	30	76,2	8.5	49.8	126,4	15.0	6,8	1.5-4 LBS
56157	BOLT	338 LAPUA	5	MDT ACC ALUMINUM CHASSIS	GRAY CERAKOTE	STAINLESS STEEL	30	76,2	9	49.8	126,4	15.0	6,8	1.5-4 LBS

SPECIFICATIONS SUBJECT TO CHANGE WITHOUT NOTICE.

110 PRECISION

PART #	ACTION	CALIBER	ROUND CPTY	STOCK	STOCK COLOR	BARREL	BARREL LENGTH IN / CM		TWIST RATE	OVERALL LENGTH IN / CM		WEIGHT LB / KG		ACCUTRIGGER ADJ.
56081	BOLT	308 WIN	10	MDT LSS XL CHASSIS	FDE CERAKOTE	MATTE BLACK CARBON STEEL	20	50,8	10-5R	38.5	97,8	8.9	4,0	1.5-4 LBS
56082	BOLT	6.5 CREEDMOOR	10	MDT LSS XL CHASSIS	FDE CERAKOTE	MATTE BLACK CARBON STEEL	24	61,0	8-5R	42.5	108,0	9.5	4,3	1.5-4 LBS
56143	BOLT	6.5 PRC	7	MDT LSS XL CHASSIS	FDE CERAKOTE	MATTE BLACK CARBON STEEL	24	61,0	8-5R	43.6	110,8	11.1	5,0	1.5-4 LBS
56083	BOLT	300 WIN MAG	5	MDT LSS XL CHASSIS	FDE CERAKOTE	MATTE BLACK CARBON STEEL	24	61,0	9.3-5R	43.6	110,8	11.3	5,1	1.5-4 LBS
56107	BOLT	300 PRC	5	MDT LSS XL CHASSIS	FDE CERAKOTE	MATTE BLACK CARBON STEEL	24	61,0	8.5	43.6	110,8	11.1	5,0	1.5-4 LBS
56084	BOLT	338 LAPUA	5	MDT LSS XL CHASSIS	FDE CERAKOTE	MATTE BLACK CARBON STEEL	24	61,0	9.3-5R	43.6	110,8	11.1	5,0	1.5-4 LBS
LEFT HAND MODELS														
56144	BOLT	308 WIN	10	MDT LSS XL CHASSIS	FDE CERAKOTE	MATTE BLACK CARBON STEEL	20	50,8	10-5R	38.5	97,8	8.9	4,0	1.5-4 LBS
56145	BOLT	6.5 CREEDMOOR	10	MDT LSS XL CHASSIS	FDE CERAKOTE	MATTE BLACK CARBON STEEL	24	61,0	8-5R	42.5	108,0	9.5	4,3	1.5-4 LBS
56149	BOLT	6.5 PRC	7	MDT LSS XL CHASSIS	FDE CERAKOTE	MATTE BLACK CARBON STEEL	24	61,0	8-5R	43.6	110,8	11.1	5,0	1.5-4 LBS
56146	BOLT	300 WIN MAG	5	MDT LSS XL CHASSIS	FDE CERAKOTE	MATTE BLACK CARBON STEEL	24	61,0	9.3-5R	43.6	110,8	11.3	5,1	1.5-4 LBS
56148	BOLT	300 PRC	5	MDT LSS XL CHASSIS	FDE CERAKOTE	MATTE BLACK CARBON STEEL	24	61,0	8.5	43.6	110,8	11.1	5,0	1.5-4 LBS
56147	BOLT	338 LAPUA	5	MDT LSS XL CHASSIS	FDE CERAKOTE	MATTE BLACK CARBON STEEL	24	61,0	9.3-5R	43.6	110,8	11.1	5,0	1.5-4 LBS

AXIS II PRECISION

PART #	ACTION	CALIBER	ROUND CPTY	STOCK	STOCK COLOR	BARREL	BARREL LENGTH IN / CM		TWIST RATE	OVERALL LENGTH IN / CM		WEIGHT LB / KG		ACCUTRIGGER ADJ.
56067	BOLT	223 REM	10	MDT CHASSIS	OLIVE DRAB	MATTE BLACK CARBON STEEL	22	55,9	7	42.5	108,0	9.9	4,5	2.5-6 LBS
56068	BOLT	243 WIN	10	MDT CHASSIS	OLIVE DRAB	MATTE BLACK CARBON STEEL	22	55,9	9.3	42.5	108,0	9.9	4,5	2.5-6 LBS
56069	BOLT	308 WIN	10	MDT CHASSIS	OLIVE DRAB	MATTE BLACK CARBON STEEL	22	55,9	10	42.5	108,0	9.9	4,5	2.5-6 LBS
56070	BOLT	6.5 CREEDMOOR	10	MDT CHASSIS	OLIVE DRAB	MATTE BLACK CARBON STEEL	22	55,9	8	42.5	108,0	9.9	4,5	2.5-6 LBS
56071	BOLT	30-06 SPFLD	5	MDT CHASSIS	OLIVE DRAB	MATTE BLACK CARBON STEEL	22	55,9	10	42.5	108,0	9.9	4,5	2.5-6 LBS
56072	BOLT	270 WIN	5	MDT CHASSIS	OLIVE DRAB	MATTE BLACK CARBON STEEL	22	55,9	10	42.5	108,0	9.9	4,5	2.5-6 LBS

112 MAGNUM TARGET

PART #	ACTION	CALIBER	ROUND CPTY	STOCK	STOCK COLOR	BARREL	BARREL LENGTH IN / CM		TWIST RATE	OVERALL LENGTH IN / CM		WEIGHT LB / KG		ACCUTRIGGER ADJ.
55356	BOLT	338 LAPUA	1	HARDWOOD	GRAY	MATTE BLACK CARBON STEEL	26	66,0	9	49.8	126,4	12.1	5,5	6OZ MIN.

12 LONG RANGE PRECISION

PART #	ACTION	CALIBER	ROUND CPTY	STOCK	STOCK COLOR	BARREL	BARREL LENGTH IN / CM		TWIST RATE	OVERALL LENGTH IN / CM		WEIGHT LB / KG		ACCUTRIGGER ADJ.
55353	BOLT	243 WIN	4	HS PRECISION	BLACK	MATTE BLACK CARBON STEEL	26	26,0	9.3	46.3	117,5	4.0	1,8	6OZ MIN.
55354	BOLT	6.5 CREEDMOOR	4	HS PRECISION	BLACK	MATTE BLACK CARBON STEEL	26	26,0	8	46.3	117,5	4.0	1,8	6OZ MIN.

SAVAGE
SAVAGE

2025

VARMINT

From prairie dogs to predators, there's no escape from your Savage Varmint rifle. This series combines the full suite of Savage® accuracy features for unfailing performance, accuracy and precision. Choose from a variety of models built for specific situations and hunting styles.

- Rugged and accurate for mobile varmint hunting
- User-adjustable AccuTrigger™
- Precision button-rilfed barrels
- Detachable box magazine *(select models)*
- Fluted Stainless Barrels *(select models)*

SAVAGE®

SPECIFICATIONS SUBJECT TO CHANGE WITHOUT NOTICE.

VARMINT

9 CALIBERS // **8** MODELS

- 223 REM
- 243 WIN
- 222 REM
- 204 RUGER
- 22-250 REM
- 6 NORMA BR
- 308 WIN
- 17 HORNET
- 22 HORNET

2025

VARMINT

12 BVSS

PART #	ACTION	CALIBER	ROUND CPTY	STOCK	STOCK COLOR	BARREL	BARREL LENGTH IN / CM		TWIST RATE	OVERALL LENGTH IN / CM		WEIGHT LB / KG		ACCUTRIGGER ADJ.
55366	BOLT	223 REM	4	WOOD LAMINATE	BROWN	STAINLESS STEEL	26	66,0	9	46.3	117,5	10.0	4,5	1.5-6 LBS
55367	BOLT	22-250 REM	4	WOOD LAMINATE	BROWN	STAINLESS STEEL	26	66,0	12	46.3	117,5	10.0	4,5	1.5-6 LBS
55092	BOLT	308 WIN	4	WOOD LAMINATE	BROWN	STAINLESS STEEL	26	66,0	10	46.3	117,5	10.0	4,5	1.5-6 LBS

12 VARMINT LOW PROFILE

PART #	ACTION	CALIBER	ROUND CPTY	STOCK	STOCK COLOR	BARREL	BARREL LENGTH IN / CM		TWIST RATE	OVERALL LENGTH IN / CM		WEIGHT LB / KG		ACCUTRIGGER ADJ.
55029	BOLT	223 REM	4	WOOD LAMINATE	BROWN	STAINLESS STEEL	26	66,0	9	46.3	117,5	10.0	4,5	1.5-6 LBS
55093	BOLT	223 REM	4	WOOD LAMINATE	BROWN	STAINLESS STEEL	26	66,0	7	46.3	117,5	10.0	4,5	1.5-6 LBS
55066	BOLT	204 RUGER	4	WOOD LAMINATE	BROWN	STAINLESS STEEL	26	66,0	12	46.3	117,5	10.0	4,5	1.5-6 LBS
55363	BOLT	22-250 REM	4	WOOD LAMINATE	BROWN	STAINLESS STEEL	26	66,0	12	46.3	117,5	10.0	4,5	1.5-6 LBS
55079	BOLT	22-250 REM	4	WOOD LAMINATE	BROWN	STAINLESS STEEL	26	66,0	9	46.3	117,5	10.0	4,5	1.5-6 LBS
55364	BOLT	243 WIN	4	WOOD LAMINATE	BROWN	STAINLESS STEEL	26	66,0	9.3	46.3	117,5	10.0	4,5	1.5-6 LBS
55094	BOLT	308 WIN	4	WOOD LAMINATE	BROWN	STAINLESS STEEL	26	66,0	10	46.3	117,5	10.0	4,5	1.5-6 LBS

SPECIFICATIONS SUBJECT TO CHANGE WITHOUT NOTICE.

12 BTCSS

PART #	ACTION	CALIBER	ROUND CPTY	STOCK	STOCK COLOR	BARREL	BARREL LENGTH IN / CM		TWIST RATE	OVERALL LENGTH IN / CM		WEIGHT LB / KG		ACCUTRIGGER ADJ.
55360	BOLT	223 REM	4	WOOD LAMINATE	BROWN	STAINLESS STEEL	26	66,0	9	46.3	117,5	10.0	4,5	1.5-6 LBS
55361	BOLT	204 RUGER	4	WOOD LAMINATE	BROWN	STAINLESS STEEL	26	66,0	12	46.3	117,5	10.0	4,5	1.5-6 LBS
55362	BOLT	22-250 REM	4	WOOD LAMINATE	BROWN	STAINLESS STEEL	26	66,0	12	46.3	117,5	10.0	4,5	1.5-6 LBS

12 LONG RANGE PRECISION VARMINTER

PART #	ACTION	CALIBER	ROUND CPTY	STOCK	STOCK COLOR	BARREL	BARREL LENGTH IN / CM		TWIST RATE	OVERALL LENGTH IN / CM		WEIGHT LB / KG		ACCUTRIGGER ADJ.
55046	BOLT	223 REM	1	HS PRECISION	BLACK	STAINLESS STEEL	26	66,0	9	46.3	117,5	11.0	5,0	6OZ MIN.
55041	BOLT	223 REM	1	HS PRECISION	BLACK	STAINLESS STEEL	26	66,0	7	46.3	117,5	11.0	5,0	6OZ MIN.
55357	BOLT	204 RUGER	1	HS PRECISION	BLACK	STAINLESS STEEL	26	66,0	12	46.3	117,5	11.0	5,0	6OZ MIN.
55358	BOLT	22-250 REM	1	HS PRECISION	BLACK	STAINLESS STEEL	26	66,0	12	46.3	117,5	11.0	5,0	6OZ MIN.
55359	BOLT	22-250 REM	1	HS PRECISION	BLACK	STAINLESS STEEL	26	66,0	9	46.3	117,5	11.0	5,0	6OZ MIN.
55085	BOLT	6 NORMA BR	1	HS PRECISION	BLACK	STAINLESS STEEL	26	66,0	8	46.3	117,5	11.0	5,0	6OZ MIN.

25 LIGHTWEIGHT VARMINTER

PART #	ACTION	CALIBER	ROUND CPTY	STOCK	STOCK COLOR	BARREL	BARREL LENGTH IN / CM		TWIST RATE	OVERALL LENGTH IN / CM		WEIGHT LB / KG		ACCUTRIGGER ADJ.
55371	BOLT	17 HORNET	4	WOOD LAMINATE	BROWN	MATTE BLACK CARBON STEEL	24	61,0	9	43.8	111,1	8.3	3,7	2.5-6 LBS
55084	BOLT	22 HORNET	4	WOOD LAMINATE	BROWN	MATTE BLACK CARBON STEEL	24	61,0	14	43.8	111,1	8.3	3,7	2.5-6 LBS
55372	BOLT	223 REM	4	WOOD LAMINATE	BROWN	MATTE BLACK CARBON STEEL	24	61,0	9	43.8	111,1	8.3	3,7	2.5-6 LBS
55373	BOLT	204 RUGER	4	WOOD LAMINATE	BROWN	MATTE BLACK CARBON STEEL	24	61,0	12	43.8	111,1	8.3	3,7	2.5-6 LBS

25 LIGHTWEIGHT VARMINTER- T

PART #	ACTION	CALIBER	ROUND CPTY	STOCK	STOCK COLOR	BARREL	BARREL LENGTH IN / CM		TWIST RATE	OVERALL LENGTH IN / CM		WEIGHT LB / KG		ACCUTRIGGER ADJ.
55374	BOLT	17 HORNET	4	WOOD LAMINATE	BROWN	MATTE BLACK CARBON STEEL	24	61,0	9	43.8	111,1	8.3	3,7	2.5-6 LBS
55375	BOLT	22 HORNET	4	WOOD LAMINATE	BROWN	MATTE BLACK CARBON STEEL	24	61,0	14	43.8	111,1	8.3	3,7	2.5-6 LBS
55376	BOLT	222 REM	4	WOOD LAMINATE	BROWN	MATTE BLACK CARBON STEEL	24	61,0	14	43.8	111,1	8.3	3,7	2.5-6 LBS
55377	BOLT	223 REM	4	WOOD LAMINATE	BROWN	MATTE BLACK CARBON STEEL	24	61,0	9	43.8	111,1	8.3	3,7	2.5-6 LBS
55378	BOLT	204 RUGER	4	WOOD LAMINATE	BROWN	MATTE BLACK CARBON STEEL	24	61,0	12	43.8	111,1	8.3	3,7	2.5-6 LBS

25 WALKING VARMINTER

PART #	ACTION	CALIBER	ROUND CPTY	STOCK	STOCK COLOR	BARREL	BARREL LENGTH IN / CM		TWIST RATE	OVERALL LENGTH IN / CM		WEIGHT LB / KG		ACCUTRIGGER ADJ.
55379	BOLT	17 HORNET	4	SYNTHETIC	BLACK	MATTE BLACK CARBON STEEL	22	55,9	9	41.8	106,0	6.9	3,1	2.5-6 LBS
55380	BOLT	22 HORNET	4	SYNTHETIC	BLACK	MATTE BLACK CARBON STEEL	22	55,9	14	41.8	106,0	6.9	3,1	2.5-6 LBS
55381	BOLT	222 REM	4	SYNTHETIC	BLACK	MATTE BLACK CARBON STEEL	22	55,9	14	41.8	106,0	6.9	3,1	2.5-6 LBS
55382	BOLT	223 REM	4	SYNTHETIC	BLACK	MATTE BLACK CARBON STEEL	22	55,9	9	41.8	106,0	6.9	3,1	2.5-6 LBS
55383	BOLT	204 RUGER	4	SYNTHETIC	BLACK	MATTE BLACK CARBON STEEL	22	55,9	12	41.8	106,0	6.9	3,1	2.5-6 LBS

25 WALKING VARMINTER CAMO

PART #	ACTION	CALIBER	ROUND CPTY	STOCK	STOCK COLOR	BARREL	BARREL LENGTH IN / CM		TWIST RATE	OVERALL LENGTH IN / CM		WEIGHT LB / KG		ACCUTRIGGER ADJ.
55384	BOLT	17 HORNET	4	SYNTHETIC	REALTREE MAX-1	MATTE BLACK CARBON STEEL	22	55,9	9	41.8	106,0	6.9	3,1	2.5-6 LBS
55385	BOLT	22 HORNET	4	SYNTHETIC	REALTREE MAX-1	MATTE BLACK CARBON STEEL	22	55,9	14	41.8	106,0	6.9	3,1	2.5-6 LBS
55386	BOLT	223 REM	4	SYNTHETIC	REALTREE MAX-1	MATTE BLACK CARBON STEEL	22	55,9	9	41.8	106,0	6.9	3,1	2.5-6 LBS

SPECIFICATIONS SUBJECT TO CHANGE WITHOUT NOTICE.

2025

A SERIES

You've never experienced rimfire like this. Our A Series includes the world's first semi-automatic rifle specifically designed for the 17 HMR cartridge, thanks to a delayed-blowback action. Loaded with accuracy-enhancing features like the AccuTrigger™, all A Series rifles redefine speed and precision.

- Straight & delayed-blowback action ensures safe, reliable cycling
- User-adjustable AccuTrigger™
- Oversized bolt handle
- 10-round rotary magazine *(8-round for 17 WSM)*
- Precision button-rifled barrels
- Carbon fiber wrapped stainless steel barrel *(select models)*
- Threading 1/2x28 *(select models)*

SAVAGE®

SPECIFICATIONS SUBJECT TO CHANGE WITHOUT NOTICE.

A SERIES

5 CALIBERS // **15** MODELS

17 HM2 · 17 HMR · 17 WSM · 22 LR · 22 WMR

TAKEDOWN MODELS AVAILABLE

ACCUTRIGGER

PROVARMINT STOCK

THUMBHOLE STOCK

2025

A SERIES

NEW//// A22 TIMBERLITE THUMBHOLE

PART #	ACTION	CALIBER	ROUND CPTY	STOCK	STOCK COLOR	BARREL	BARREL LENGTH IN / CM		TWIST RATE	OVERALL LENGTH IN / CM		WEIGHT LB / KG		ACCUTRIGGER ADJ.
47253	SEMI AUTO	22 LR	10	HARDWOOD	GRAY BLACK SPIDER WEB	HEAVY CARBON FIBER WRAPPED STAINLESS STEEL	18	45,7	16	37.2	94,5	5.3	2,4	3-5 LBS

NEW//// A22 TIMBER THUMBHOLE

PART #	ACTION	CALIBER	ROUND CPTY	STOCK	STOCK COLOR	BARREL	BARREL LENGTH IN / CM		TWIST RATE	OVERALL LENGTH IN / CM		WEIGHT LB / KG		ACCUTRIGGER ADJ.
47247	SEMI AUTO	22 LR	10	HARDWOOD	NATURAL	HEAVY BLUED CARBON STEEL	18	45,7	16	36	91,4	5.7	2,6	3-5 LBS

A22 TAKEDOWN FDE

PART #	ACTION	CALIBER	ROUND CPTY	STOCK	STOCK COLOR	BARREL	BARREL LENGTH IN / CM		TWIST RATE	OVERALL LENGTH IN / CM		WEIGHT LB / KG		ACCUTRIGGER ADJ.
47262	SEMI AUTO	22 LR	10	SYNTHETIC TAKEDOWN	FLAT DARK EARTH	BLUED CARBON STEEL	18	45,7	16	36.9	93,7	6.3	2,9	3-5 LBS

A22 TAKEDOWN

PART #	ACTION	CALIBER	ROUND CPTY	STOCK	STOCK COLOR	BARREL	BARREL LENGTH IN / CM		TWIST RATE	OVERALL LENGTH IN / CM		WEIGHT LB / KG		ACCUTRIGGER ADJ.
47260	SEMI AUTO	22 LR	10	SYNTHETIC TAKEDOWN	BLACK	BLUED CARBON STEEL	18	45,7	16	36.9	93,7	6.3	2,9	3-5 LBS

A22 PRECISION LITE

PART #	ACTION	CALIBER	ROUND CPTY	STOCK	STOCK COLOR	BARREL	BARREL LENGTH IN / CM		TWIST RATE	OVERALL LENGTH IN / CM		WEIGHT LB / KG		ACCUTRIGGER ADJ.
47256	SEMI AUTO	22 LR	10	1 PIECE MDT CHASSIS	BLACK	CARBON FIBER WRAPPED STAINLESS	18	45,7	16	37.3	94,6	6.7	3,0	3-5 LBS

A22 PRECISION

PART #	ACTION	CALIBER	ROUND CPTY	STOCK	STOCK COLOR	BARREL	BARREL LENGTH IN / CM		TWIST RATE	OVERALL LENGTH IN / CM		WEIGHT LB / KG		ACCUTRIGGER ADJ.
47248	SEMI AUTO	22 LR	10	1 PIECE MDT CHASSIS	BLACK	BLUED CARBON STEEL	18	45,7	16	37.3	94,6	7.3	3,3	3-5 LBS

A22 FV-SR

PART #	ACTION	CALIBER	ROUND CPTY	STOCK	STOCK COLOR	BARREL	BARREL LENGTH IN / CM		TWIST RATE	OVERALL LENGTH IN / CM		WEIGHT LB / KG		ACCUTRIGGER ADJ.
47241	SEMI AUTO	22 LR	10	SYNTHETIC	BLACK	BLUED CARBON STEEL	16.5	41,9	16	35.5	90,2	5.3	2,4	3-5 LBS

A22

PART #	ACTION	CALIBER	ROUND CPTY	STOCK	STOCK COLOR	BARREL	BARREL LENGTH IN / CM		TWIST RATE	OVERALL LENGTH IN / CM		WEIGHT LB / KG		ACCUTRIGGER ADJ.
47200	SEMI AUTO	22 LR	10	SYNTHETIC	BLACK	BLUED CARBON STEEL	22	55,9	16	41.0	104,1	5.6	2,5	3-5 LBS

A SERIES MAGNUM

PART #	ACTION	CALIBER	ROUND CPTY	STOCK	STOCK COLOR	BARREL	BARREL LENGTH IN / CM		TWIST RATE	OVERALL LENGTH IN / CM		WEIGHT LB / KG		ACCUTRIGGER ADJ.
55529	SEMI AUTO	17 HMR	10	SYNTHETIC	BLACK	BLUED CARBON STEEL	22	55,9	9	41.5	105,4	5.6	2,6	3-5 LBS
47700	SEMI AUTO	17 HM2	10	SYNTHETIC	BLACK	BLUED CARBON STEEL	20	50,8	9	39.5	100,3	5.7	2,6	3-5 LBS
55530	SEMI AUTO	22 WMR	10	SYNTHETIC	BLACK	BLUED CARBON STEEL	22	55,9	16	41.5	105,4	5.6	2,6	3-5 LBS

A SERIES TARGET THUMBHOLE

PART #	ACTION	CALIBER	ROUND CPTY	STOCK	STOCK COLOR	BARREL	BARREL LENGTH IN / CM		TWIST RATE	OVERALL LENGTH IN / CM		WEIGHT LB / KG		ACCUTRIGGER ADJ.
47215	SEMI AUTO	22 LR	10	WOOD LAMINATE	GRAY	BLUED CARBON STEEL	22	55,9	16	41.5	105,4	7.1	3,2	3-5 LBS
55726	SEMI AUTO	22 WMR	10	WOOD LAMINATE	GRAY	BLUED CARBON STEEL	22	55,9	16	41.5	105,4	7.1	3,2	3-5 LBS
55534	SEMI AUTO	17 HMR	10	WOOD LAMINATE	GRAY	BLUED CARBON STEEL	22	55,9	9	41.5	105,4	7.1	3,2	3-5 LBS
56210	SEMI AUTO	17 WSM	8	WOOD LAMINATE	GRAY	BLUED CARBON STEEL	22	55,9	8	41.5	105,4	7.1	3,2	3-5 LBS

A SERIES PRO VARMINT

PART #	ACTION	CALIBER	ROUND CPTY	STOCK	STOCK COLOR	BARREL	BARREL LENGTH IN / CM		TWIST RATE	OVERALL LENGTH IN / CM		WEIGHT LB / KG		ACCUTRIGGER ADJ.
55727	SEMI AUTO	22 WMR	10	BOYDS PRO VARMINT	BLACK	BLUED CARBON STEEL W/ STRAIGHT FLUTING	22	55,9	16	41.5	105,4	7.1	3,2	2.5-6 LBS
55728	SEMI AUTO	17 HMR	10	BOYDS PRO VARMINT	BLACK	BLUED CARBON STEEL W/ STRAIGHT FLUTING	22	55,9	9	41.5	105,4	7.4	3,4	3-5 LBS

A17 SPORTER

PART #	ACTION	CALIBER	ROUND CPTY	STOCK	STOCK COLOR	BARREL	BARREL LENGTH IN / CM		TWIST RATE	OVERALL LENGTH IN / CM		WEIGHT LB / KG		ACCUTRIGGER ADJ.
55533	SEMI AUTO	17 HMR	10	WOOD LAMINATE	GRAY	BLUED CARBON STEEL	22	55,9	9	41.5	105,4	5.6	2,6	3-5 LBS
56224	SEMI AUTO	17 WSM	8	WOOD LAMINATE	GRAY	BLUED CARBON STEEL	22	55,9	8	41.5	105,4	5.6	2,6	3-5 LBS

A17 HEAVY BARREL

PART #	ACTION	CALIBER	ROUND CPTY	STOCK	STOCK COLOR	BARREL	BARREL LENGTH IN / CM		TWIST RATE	OVERALL LENGTH IN / CM		WEIGHT LB / KG		ACCUTRIGGER ADJ.
55532	SEMI AUTO	17 HMR	10	SYNTHETIC	BLACK	BLUED CARBON STEEL	22	55,9	9	42.0	106,7	5.8	2,6	3-5 LBS

A17 TARGET SPORTER LAMINATE

PART #	ACTION	CALIBER	ROUND CPTY	STOCK	STOCK COLOR	BARREL	BARREL LENGTH IN / CM		TWIST RATE	OVERALL LENGTH IN / CM		WEIGHT LB / KG		ACCUTRIGGER ADJ.
55531	SEMI AUTO	17 HMR	10	WOOD LAMINATE	GRAY	BLUED CARBON STEEL	22	55,9	9	41.5	105,4	6.8	3,1	3-5 LBS

A22 FSS

PART #	ACTION	CALIBER	ROUND CPTY	STOCK	STOCK COLOR	BARREL	BARREL LENGTH IN / CM		TWIST RATE	OVERALL LENGTH IN / CM		WEIGHT LB / KG		ACCUTRIGGER ADJ.
47216	SEMI AUTO	22 LR	10	SYNTHETIC	BLACK	STAINLESS STEEL	22	55,9	16	41.0	104,1	5.6	2,5	3-5 LBS

2025

MODEL 64

Sending rounds down range has never so much fun. The Model 64 Series is up for any small game or plinking pursuit with a reliable straight-blowback action and a 10 or 20-round detachable box magazine. The wide variety of configurations offer different options for different shooters, with one common thread: **Accuracy**.

- Reliable, semi-automatic 22 LR
- Detachable box magazine
- Open sights *(select models)*
- Carbon or stainless steel barreled actions
- Straight-blowback action
- Threading 1/2x28 *(select models)*

SAVAGE®

SPECIFICATIONS SUBJECT TO CHANGE WITHOUT NOTICE.

MODEL 64

1 CALIBER // **20** MODELS

22 LR

PRECISION STOCK

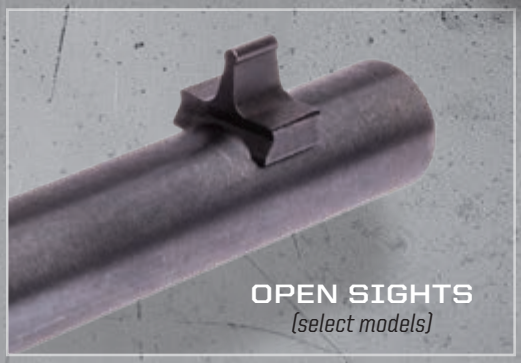

OPEN SIGHTS
(select models)

TAKEDOWN MODELS AVAILABLE

WOOD STOCK
(64G)

2025

MODEL 64

NEW//// 64 F

PART #	ACTION	CALIBER	ROUND CPTY	STOCK	STOCK COLOR	BARREL	BARREL LENGTH IN / CM		TWIST RATE	OVERALL LENGTH IN / CM		WEIGHT LB / KG	
40203	SEMI AUTO	22 LR	10	SYNTHETIC	BLACK	BLUED CARBON STEEL	21	53,3	16	40.5	102,9	5.0	2,3
40217	SEMI AUTO	22 LR	10	SYNTHETIC	BLUE	BLUED CARBON STEEL	21	53,3	16	40.5	102,9	5.0	2,3
40218	SEMI AUTO	22 LR	10	SYNTHETIC	PINK	BLUED CARBON STEEL	21	53,3	16	40.5	102,9	5.0	2,3
40219	SEMI AUTO	22 LR	10	SYNTHETIC	PURPLE	BLUED CARBON STEEL	21	53,3	16	40.5	102,9	5.0	2,3
40220	SEMI AUTO	22 LR	10	SYNTHETIC	ORANGE	BLUED CARBON STEEL	21	53,3	16	40.5	102,9	5.0	2,3
40221	SEMI AUTO	22 LR	10	SYNTHETIC	GREEN	BLUED CARBON STEEL	21	53,3	16	40.5	102,9	5.0	2,3
40222	SEMI AUTO	22 LR	10	SYNTHETIC	RED, WHITE, BLUE	BLUED CARBON STEEL	21	53,3	16	40.5	102,9	5.0	2,3
LEFT HAND MODELS													
40060	SEMI AUTO	22 LR	10	SYNTHETIC	BLACK	BLUED CARBON STEEL	21	53,3	16	40.5	102,9	5.0	2,3

64 TAKEDOWN

PART #	ACTION	CALIBER	ROUND CPTY	STOCK	STOCK COLOR	BARREL	BARREL LENGTH IN / CM		TWIST RATE	OVERALL LENGTH IN / CM		WEIGHT LB / KG	
40207	SEMI AUTO	22 LR	10	SYNTHETIC TAKEDOWN	BLACK	BLUED CARBON STEEL	16.5	41,9	16	36.3	92,1	4.5	2,0
LEFT HAND MODELS													
40210	SEMI AUTO	22 LR	10	SYNTHETIC TAKEDOWN	BLACK	BLUED CARBON STEEL	16.5	41,9	16	36.3	92,1	4.5	2,0

SPECIFICATIONS SUBJECT TO CHANGE WITHOUT NOTICE.

64 FSS

PART #	ACTION	CALIBER	ROUND CPTY	STOCK	STOCK COLOR	BARREL	BARREL LENGTH IN / CM		TWIST RATE	OVERALL LENGTH IN / CM		WEIGHT LB / KG	
31000	SEMI AUTO	22 LR	10	SYNTHETIC	BLACK	STAINLESS STEEL	21	53,3	16	40.5	102,9	5.0	2,3

64 G

PART #	ACTION	CALIBER	ROUND CPTY	STOCK	STOCK COLOR	BARREL	BARREL LENGTH IN / CM		TWIST RATE	OVERALL LENGTH IN / CM		WEIGHT LB / KG	
30000	SEMI AUTO	22 LR	10	HARDWOOD	BROWN	BLUED CARBON STEEL	21	53,3	16	40.5	102,9	5.0	2,3

64 TR-SR

PART #	ACTION	CALIBER	ROUND CPTY	STOCK	STOCK COLOR	BARREL	BARREL LENGTH IN / CM		TWIST RATE	OVERALL LENGTH IN / CM		WEIGHT LB / KG	
45200	SEMI AUTO	22 LR	10	HARDWOOD	BLACK	BLUED CARBON STEEL	16.5	41,9	16	36.8	93,3	6.8	3,1

64 FV-SR

PART #	ACTION	CALIBER	ROUND CPTY	STOCK	STOCK COLOR	BARREL	BARREL LENGTH IN / CM		TWIST RATE	OVERALL LENGTH IN / CM		WEIGHT LB / KG	
45110	SEMI AUTO	22 LR	10	SYNTHETIC	BLACK	BLUED CARBON STEEL FLUTED	16.5	41,9	16	38.1	96,8	5.4	2,5

64 FXP

PART #	ACTION	CALIBER	ROUND CPTY	STOCK	STOCK COLOR	BARREL	BARREL LENGTH IN / CM		TWIST RATE	OVERALL LENGTH IN / CM		WEIGHT LB / KG	
40000	SEMI AUTO	22 LR	10	SYNTHETIC TAKEDOWN	BLACK	BLUED CARBON STEEL	21	53,3	16	40.0	101,6	5.0	2,3
LEFT HAND MODELS													
40061	SEMI AUTO	22 LR	10	SYNTHETIC TAKEDOWN	BLACK	BLUED CARBON STEEL	21	53,3	16	40.0	101,6	5.0	2,3

64 FVXP

PART #	ACTION	CALIBER	ROUND CPTY	STOCK	STOCK COLOR	BARREL	BARREL LENGTH IN / CM		TWIST RATE	OVERALL LENGTH IN / CM		WEIGHT LB / KG	
45100	SEMI AUTO	22 LR	10	SYNTHETIC TAKEDOWN	BLACK	HEAVY BLUED CARBON STEEL	21	53,3	16	40.0	101,6	5.5	2,5

64 PRECISION

PART #	ACTION	CALIBER	ROUND CPTY	STOCK	STOCK COLOR	BARREL	BARREL LENGTH IN / CM		TWIST RATE	OVERALL LENGTH IN / CM		WEIGHT LB / KG	
45120	SEMI AUTO	22 LR	20	SYNTHETIC CHASSIS	BLACK	HEAVY BLUED CARBON STEEL	16.5	41,9	16	35.5	90,2	5.5	2,5
45114	SEMI AUTO	22 LR	10	SYNTHETIC CHASSIS	BLACK	HEAVY BLUED CARBON STEEL	16.5	41,9	16	35.5	90,2	5.5	2,5

64 PRECISION FDE

PART #	ACTION	CALIBER	ROUND CPTY	STOCK	STOCK COLOR	BARREL	BARREL LENGTH IN / CM		TWIST RATE	OVERALL LENGTH IN / CM		WEIGHT LB / KG	
45125	SEMI AUTO	22 LR	20	SYNTHETIC CHASSIS	FDE	HEAVY BLUED CARBON STEEL	16.5	41,9	16	35.5	90,2	5.5	2,5
45124	SEMI AUTO	22 LR	10	SYNTHETIC CHASSIS	FDE	HEAVY BLUED CARBON STEEL	16.5	41,9	16	35.5	90,2	5.5	2,5

64 CAMO

PART #	ACTION	CALIBER	ROUND CPTY	STOCK	STOCK COLOR	BARREL	BARREL LENGTH IN / CM		TWIST RATE	OVERALL LENGTH IN / CM		WEIGHT LB / KG	
40002	SEMI AUTO	22 LR	10	SYNTHETIC	NEXT G1	BLUED CARBON STEEL	21	53,3	16	40.5	102,9	5.0	2,3

2025

B SERIES

The better a rifle fits you, the better you'll shoot it. That's why we gave our B Series bolt-action rimfires a modern ergonomically designed stock with a higher comb, top tang safety and target style, vertical pistol grip.

- Ergonomic design
- Precision button-rifled barrels
- Zero Tolerance Thread-In Headspacing
- User adjustable AccuTrigger™
- 10-round rotary magazine
- Drilled and tapped for scope mounts
- Threading 1/2x28 *(select models)*

SAVAGE®

SPECIFICATIONS SUBJECT TO CHANGE WITHOUT NOTICE.

B SERIES

4 CALIBERS // **32** MODELS

17 HMR · 21 SHARP · 22 LR · 22 WMR

2025

B SERIES

NEW//// B SERIES TIMBERLITE THUMBHOLE

PART #	ACTION	CALIBER	ROUND CPTY	STOCK	STOCK COLOR	BARREL	BARREL LENGTH IN / CM		TWIST RATE	OVERALL LENGTH IN / CM		WEIGHT LB / KG		ACCUTRIGGER ADJ.
70218	BOLT	22 LR	10	HARDWOOD	GRAY SPIDER WEB	CARBON FIBER WRAPPED STAINLESS STEEL	18	45.7	16	36	91,4	5.3	2,4	2.5-6 LBS
70518	BOLT	22 WMR	10	HARDWOOD	GRAY SPIDER WEB	CARBON FIBER WRAPPED STAINLESS STEEL	18	45.7	16	36	91,4	5.3	2,4	2.5-6 LBS
70818	BOLT	17 HMR	10	HARDWOOD	GRAY SPIDER WEB	CARBON FIBER WRAPPED STAINLESS STEEL	18	45.7	9	36	91,4	5.3	2,4	2.5-6 LBS

NEW//// B SERIES TIMBER THUMBHOLE

PART #	ACTION	CALIBER	ROUND CPTY	STOCK	STOCK COLOR	BARREL	BARREL LENGTH IN / CM		TWIST RATE	OVERALL LENGTH IN / CM		WEIGHT LB / KG		ACCUTRIGGER ADJ.
70217	BOLT	22 LR	10	HARDWOOD	NATURAL	BLUED CARBON STEEL	18	45.7	16	36	91,4	5.7	2,6	2.5-6 LBS
70517	BOLT	22 WMR	10	HARDWOOD	NATURAL	BLUED CARBON STEEL	18	45.7	16	36	91,4	5.7	2,6	2.5-6 LBS
70817	BOLT	17 HMR	10	HARDWOOD	NATURAL	BLUED CARBON STEEL	18	45.7	9	36	91,4	5.7	2,6	2.5-6 LBS

SAVAGE®

SPECIFICATIONS SUBJECT TO CHANGE WITHOUT NOTICE.

B SERIES PRECISION LITE

PART #	ACTION	CALIBER	ROUND CPTY	STOCK	STOCK COLOR	BARREL	BARREL LENGTH IN / CM		TWIST RATE	OVERALL LENGTH IN / CM		WEIGHT LB / KG		ACCUTRIGGER ADJ.
70256	BOLT	22 LR	10	1 PIECE MDT CHASSIS	BLACK MATTE	CARBON FIBER WRAPPED STAINLESS	18	45,7	16	36.5	92,7	6.8	3,1	1.5-5 LBS
70556	BOLT	22 WMR	10	1 PIECE MDT CHASSIS	BLACK MATTE	CARBON FIBER WRAPPED STAINLESS	18	45,7	16	36.5	92,7	6.8	3,1	1.5-5 LBS
70856	BOLT	17 HMR	10	1 PIECE MDT CHASSIS	BLACK MATTE	CARBON FIBER WRAPPED STAINLESS	18	45,7	9	36.5	92,7	6.8	3,1	1.5-5 LBS

B SERIES PRECISION

PART #	ACTION	CALIBER	ROUND CPTY	STOCK	STOCK COLOR	BARREL	BARREL LENGTH IN / CM		TWIST RATE	OVERALL LENGTH IN / CM		WEIGHT LB / KG		ACCUTRIGGER ADJ.
70248	BOLT	22 LR	10	1 PIECE MDT CHASSIS	BLACK MATTE	HEAVY BLUED CARBON STEEL	18	45,7	16	36.6	93,0	7.4	3,3	1.5-5 LBS
70548	BOLT	22 WMR	10	1 PIECE MDT CHASSIS	BLACK MATTE	HEAVY BLUED CARBON STEEL	18	45,7	16	36.6	93,0	7.4	3,3	1.5-5 LBS
70848	BOLT	17 HMR	10	1 PIECE MDT CHASSIS	BLACK MATTE	HEAVY BLUED CARBON STEEL	18	45,7	9	36.6	93,0	7.4	3,3	1.5-5 LBS

B SERIES G

PART #	ACTION	CALIBER	ROUND CPTY	STOCK	STOCK COLOR	BARREL	BARREL LENGTH IN / CM		TWIST RATE	OVERALL LENGTH IN / CM		WEIGHT LB / KG		ACCUTRIGGER ADJ.
70210	BOLT	22 LR	10	HARDWOOD	BROWN	BLUED CARBON STEEL	21	53,3	16	39.3	99,7	6.4	2,9	2.5-6 LBS
70810	BOLT	17 HMR	10	HARDWOOD	BROWN	BLUED CARBON STEEL	21	53,3	9	39.8	101,0	6.4	2,9	2.5-6 LBS
70510	BOLT	22 WMR	10	HARDWOOD	BROWN	BLUED CARBON STEEL	21	53,3	16	39.8	101,0	6.4	2,9	2.5-6 LBS

B SERIES F

PART #	ACTION	CALIBER	ROUND CPTY	STOCK	STOCK COLOR	BARREL	BARREL LENGTH IN / CM		TWIST RATE	OVERALL LENGTH IN / CM		WEIGHT LB / KG		ACCUTRIGGER ADJ.
70200	BOLT	22 LR	10	SYNTHETIC	BLACK	BLUED CARBON STEEL	21	53,3	16	39.0	99,1	5.5	2,5	2.5-6 LBS
70800	BOLT	17 HMR	10	SYNTHETIC	BLACK	BLUED CARBON STEEL	21	53,3	9	39.0	99,1	5.5	2,5	2.5-6 LBS
70500	BOLT	22 WMR	10	SYNTHETIC	BLACK	BLUED CARBON STEEL	21	53,3	16	39.0	99,1	5.8	2,5	2.5-6 LBS
NEW 70242	BOLT	21 SHARP	10	SYNTHETIC	BLACK	BLUED CARBON STEEL	21	53,3	10	39	99,1	6.2	2,8	2.5-6 LBS
COMPACT MODELS														
70814	BOLT	17 HMR	10	SYNTHETIC	BLACK	BLUED CARBON STEEL	18	45,7	9	35.5	90,2	5.3	2,4	2.5-6 LBS
70214	BOLT	22 LR	10	SYNTHETIC	BLACK	BLUED CARBON STEEL	18	45,7	16	35.5	90,2	5.3	2,4	2.5-6 LBS
70514	BOLT	22 WMR	10	SYNTHETIC	BLACK	BLUED CARBON STEEL	18	45,7	16	35.5	90,2	5.3	2,4	2.5-6 LBS
LEFT HAND MODELS														
70240	BOLT	22 LR	10	SYNTHETIC	BLACK	BLUED CARBON STEEL	21	53,3	16	39.0	99,1	5.5	2,5	2.5-6 LBS
70540	BOLT	22 WMR	10	SYNTHETIC	BLACK	BLUED CARBON STEEL	21	53,3	16	39.0	99,1	5.5	2,5	2.5-6 LBS
70840	BOLT	17 HMR	10	SYNTHETIC	BLACK	BLUED CARBON STEEL	21	53,3	9	39.0	99,1	5.5	2,5	2.5-6 LBS

B SERIES FVSS

PART #	ACTION	CALIBER	ROUND CPTY	STOCK	STOCK COLOR	BARREL	BARREL LENGTH IN / CM		TWIST RATE	OVERALL LENGTH IN / CM		WEIGHT LB / KG		ACCUTRIGGER ADJ.
70202	BOLT	22 LR	10	SYNTHETIC	BLACK	STAINLESS STEEL	21	53,3	16	39.0	99,1	6.2	2,8	2.5-6 LBS
70802	BOLT	17 HMR	10	SYNTHETIC	BLACK	STAINLESS STEEL	21	53,3	9	39.0	99,1	6.2	2,8	2.5-6 LBS
70502	BOLT	22 WMR	10	SYNTHETIC	BLACK	STAINLESS STEEL	21	53,3	16	39.0	99,1	6.2	2,8	2.5-6 LBS

B SERIES FV-SR

PART #	ACTION	CALIBER	ROUND CPTY	STOCK	STOCK COLOR	BARREL	BARREL LENGTH IN / CM		TWIST RATE	OVERALL LENGTH IN / CM		WEIGHT LB / KG		ACCUTRIGGER ADJ.
70203	BOLT	22 LR	10	SYNTHETIC	BLACK	HEAVY BLUED CARBON STEEL	16.3	41,3	16	34.8	88,3	5.6	2,5	2.5-6 LBS
70803	BOLT	17 HMR	10	SYNTHETIC	BLACK	HEAVY BLUED CARBON STEEL	16.3	41,3	9	34.8	88,3	5.6	2,5	2.5-6 LBS
70503	BOLT	22 WMR	10	SYNTHETIC	BLACK	HEAVY BLUED CARBON STEEL	16.3	41,3	16	34.8	88,3	5.6	2,5	2.5-6 LBS

SAVAGE®

SPECIFICATIONS SUBJECT TO CHANGE WITHOUT NOTICE.

VORTEX
DIAMONDBACK

2025

MARK II

At Savage, bolt-action rifles are in our DNA. We know what it takes to build a truly reliable bolt gun, and we put all of it into our trusted Mark II Series. The platform extracts the utmost precision from the 22 LR cartridge, whether you hunt, plink or compete.

- Precision button-rifled barrels
- Carbon and stainless steel barreled actions
- User adjustable AccuTrigger™
- Detachable box magazine
- Threading 1/2x28 *(select models)*

SAVAGE®

SPECIFICATIONS SUBJECT TO CHANGE WITHOUT NOTICE.

MARK II

3 CALIBERS // **21** MODELS

17 HM2 · 21 SHARP · 22 LR

// MARK II TR

// MARK II MINIMALIST

2025

MARK II

MARK II MINIMALIST GREEN

	PART #	ACTION	CALIBER	ROUND CPTY	STOCK	STOCK COLOR	BARREL	BARREL LENGTH IN / CM		TWIST RATE	OVERALL LENGTH IN / CM		WEIGHT LB / KG		ACCUTRIGGER ADJ.
	26736	BOLT	22 LR	10	WOOD LAMINATE	GREEN	BLUED CARBON STEEL	18	45,7	16	37.0	94,0	5.7	2,6	2.5-6 LBS
NEW	26743	BOLT	21 SHARP	10	WOOD LAMINATE	GREEN	BLUED CARBON STEEL	18	45,7	10	37.0	94,0	5.7	2,6	2.5-6 LBS

MARK II MINIMALIST BROWN

PART #	ACTION	CALIBER	ROUND CPTY	STOCK	STOCK COLOR	BARREL	BARREL LENGTH IN / CM		TWIST RATE	OVERALL LENGTH IN / CM		WEIGHT LB / KG		ACCUTRIGGER ADJ.
26737	BOLT	22 LR	10	WOOD LAMINATE	BROWN	BLUED CARBON STEEL	18	45,7	16	37.0	94,0	5.5	2,5	2.5-6 LBS

MARK II F

	PART #	ACTION	CALIBER	ROUND CPTY	STOCK	STOCK COLOR	BARREL	BARREL LENGTH IN / CM		TWIST RATE	OVERALL LENGTH IN / CM		WEIGHT LB / KG		ACCUTRIGGER ADJ.
	26700	BOLT	22 LR	10	SYNTHETIC	BLACK	BLUED CARBON STEEL	21	53,3	16	39.5	100,3	5.5	2,5	2.5-6 LBS
	26702	BOLT	17 HM2	10	SYNTHETIC	BLACK	BLUED CARBON STEEL	21	53,3	9	39.5	100,3	5.5	2,5	2.5-6 LBS
NEW	26741	BOLT	21 SHARP	10	SYNTHETIC	BLACK	BLUED CARBON STEEL	21	53,3	10	39.5	100,3	5.5	2,5	2.5-6 LBS

SPECIFICATIONS SUBJECT TO CHANGE WITHOUT NOTICE.

MARK II FSS

PART #	ACTION	CALIBER	ROUND CPTY	STOCK	STOCK COLOR	BARREL	BARREL LENGTH IN / CM		TWIST RATE	OVERALL LENGTH IN / CM		WEIGHT LB / KG		ACCUTRIGGER ADJ.
24700	BOLT	22 LR	10	SYNTHETIC	BLACK	STAINLESS STEEL	21	53,3	16	39.5	100,3	5.5	2,5	2.5-6 LBS

MARK II FV

PART #	ACTION	CALIBER	ROUND CPTY	STOCK	STOCK COLOR	BARREL	BARREL LENGTH IN / CM		TWIST RATE	OVERALL LENGTH IN / CM		WEIGHT LB / KG		ACCUTRIGGER ADJ.
28700	BOLT	22 LR	5	SYNTHETIC	BLACK	HEAVY BLUED CARBON STEEL	21	53,3	16	39.8	101,0	6.0	2,7	2.5-6 LBS
26724	BOLT	17 HM2	5	SYNTHETIC	BLACK	HEAVY BLUED CARBON STEEL	21	53,3	9	39.8	101,0	6.0	2,7	2.5-6 LBS

MARK II FV-SR

	PART #	ACTION	CALIBER	ROUND CPTY	STOCK	STOCK COLOR	BARREL	BARREL LENGTH IN / CM		TWIST RATE	OVERALL LENGTH IN / CM		WEIGHT LB / KG		ACCUTRIGGER ADJ.
	28702	BOLT	22 LR	5	SYNTHETIC	BLACK	HEAVY BLUED CARBON STEEL	16.5	41,9	16	35.3	89,5	5.5	2,5	2.5-6 LBS
NEW	28741	BOLT	21 SHARP	10	SYNTHETIC	BLACK	HEAVY BLUED CARBON STEEL	16.5	41,9	10	35	88,9	5.5	2,5	2.5-6 LBS

MARK II FVT

PART #	ACTION	CALIBER	ROUND CPTY	STOCK	STOCK COLOR	BARREL	BARREL LENGTH IN / CM		TWIST RATE	OVERALL LENGTH IN / CM		WEIGHT LB / KG		ACCUTRIGGER ADJ.
28800	BOLT	22 LR	5	SYNTHETIC	BLACK	HEAVY BLUED CARBON STEEL	21	53,3	16	39.8	101,0	6.1	2,8	2.5-6 LBS
LEFT HAND MODEL														
28801	BOLT	22 LR	5	SYNTHETIC	BLACK	HEAVY BLUED CARBON STEEL	21	53,3	16	39.8	101,0	6.1	2,8	2.5-6 LBS

MARK II CAMO

PART #	ACTION	CALIBER	ROUND CPTY	STOCK	STOCK COLOR	BARREL	BARREL LENGTH IN / CM		TWIST RATE	OVERALL LENGTH IN / CM		WEIGHT LB / KG		ACCUTRIGGER ADJ.
26800	BOLT	22 LR	10	SYNTHETIC	NEXT G1	BLUED CARBON STEEL	21	53,3	16	39.5	100,3	5.0	2,3	2.5-6 LBS

MARK II G

PART #	ACTION	CALIBER	ROUND CPTY	STOCK	STOCK COLOR	BARREL	BARREL LENGTH IN / CM		TWIST RATE	OVERALL LENGTH IN / CM		WEIGHT LB / KG		ACCUTRIGGER ADJ.
20700	BOLT	22 LR	10	HARDWOOD	BROWN	BLUED CARBON STEEL	21	53,3	16	39.5	100,3	5.5	2,5	2.5-6 LBS
60703	BOLT	22 LR	10	HARDWOOD	BROWN	BLUED CARBON STEEL	19	48,3	16	37.8	95,9	5.0	2,3	2.5-6 LBS
LEFT HAND MODELS														
50701	BOLT	22 LR	10	HARDWOOD	BROWN	BLUED CARBON STEEL	21	53,3	16	39.5	100,3	5.5	2,5	2.5-6 LBS
50702	BOLT	22 LR	10	HARDWOOD	BROWN	BLUED CARBON STEEL	19	48,3	16	37.8	95,9	5.0	2,3	2.5-6 LBS

SAVAGE®

SPECIFICATIONS SUBJECT TO CHANGE WITHOUT NOTICE.

MARK II BV

PART #	ACTION	CALIBER	ROUND CPTY	STOCK	STOCK COLOR	BARREL	BARREL LENGTH IN / CM		TWIST RATE	OVERALL LENGTH IN / CM		WEIGHT LB / KG		ACCUTRIGGER ADJ.
25700	BOLT	22 LR	5	WOOD LAMINATE	BROWN	HEAVY BLUED CARBON STEEL	21	53,3	16	39.8	101,0	6.7	3,1	2.5-6 LBS

MARK II BTV

PART #	ACTION	CALIBER	ROUND CPTY	STOCK	STOCK COLOR	BARREL	BARREL LENGTH IN / CM		TWIST RATE	OVERALL LENGTH IN / CM		WEIGHT LB / KG		ACCUTRIGGER ADJ.
28750	BOLT	22 LR	5	WOOD LAMINATE	BROWN	HEAVY BLUED CARBON STEEL	21	53,3	16	40.0	101,6	6.5	2,9	2.5-6 LBS

MARK II BTVS

PART #	ACTION	CALIBER	ROUND CPTY	STOCK	STOCK COLOR	BARREL	BARREL LENGTH IN / CM		TWIST RATE	OVERALL LENGTH IN / CM		WEIGHT LB / KG		ACCUTRIGGER ADJ.
25725	BOLT	22 LR	5	WOOD LAMINATE	BROWN	HEAVY STAINLESS STEEL	21	53,3	16	40.0	101,6	7.2	3,3	2.5-6 LBS
LEFT HAND MODELS														
25795	BOLT	22 LR	5	WOOD LAMINATE	BROWN	HEAVY STAINLESS STEEL	21	53,3	16	40.0	101,6	7.2	3,3	2.5-6 LBS

MARK II BRJ

PART #	ACTION	CALIBER	ROUND CPTY	STOCK	STOCK COLOR	BARREL	BARREL LENGTH IN / CM		TWIST RATE	OVERALL LENGTH IN / CM		WEIGHT LB / KG		ACCUTRIGGER ADJ.
25735	BOLT	22 LR	5	WOOD LAMINATE	MULTI-COLOR	HEAVY CARBON STEEL FLUTED	21	53,3	16	40.0	101,6	6.3	2,9	2.5-6 LBS

MARK II BSEV

PART #	ACTION	CALIBER	ROUND CPTY	STOCK	STOCK COLOR	BARREL	BARREL LENGTH IN / CM		TWIST RATE	OVERALL LENGTH IN / CM		WEIGHT LB / KG		ACCUTRIGGER ADJ.
25740	BOLT	22 LR	5	WOOD LAMINATE	MULTI-COLOR	HEAVY STAINLESS STEEL FLUTED	21	53,3	16	40.0	101,6	6.2	2,8	2.5-6 LBS

MARK II TR

PART #	ACTION	CALIBER	ROUND CPTY	STOCK	STOCK COLOR	BARREL	BARREL LENGTH IN / CM		TWIST RATE	OVERALL LENGTH IN / CM		WEIGHT LB / KG		ACCUTRIGGER ADJ.
25745	BOLT	22 LR	5	TACTICAL HARDWOOD	BLACK	HEAVY BLUED CARBON STEEL	22	55,9	16	40.0	101,6	7.5	3,4	2.5-6 LBS

SAVAGE®

SPECIFICATIONS SUBJECT TO CHANGE WITHOUT NOTICE.

MARK II TRR-SR

PART #	ACTION	CALIBER	ROUND CPTY	STOCK	STOCK COLOR	BARREL	BARREL LENGTH IN / CM		TWIST RATE	OVERALL LENGTH IN / CM		WEIGHT LB / KG		ACCUTRIGGER ADJ.
25752	BOLT	22 LR	5	TACTICAL HARDWOOD	BLACK	HEAVY BLUED CARBON STEEL	22	55,9	16	41.0	104,1	7.9	3,6	2.5-6 LBS

MARK II FVXP

PART #	ACTION	CALIBER	ROUND CPTY	STOCK	STOCK COLOR	BARREL	BARREL LENGTH IN / CM		TWIST RATE	OVERALL LENGTH IN / CM		WEIGHT LB / KG		ACCUTRIGGER ADJ.
29200	BOLT	22 LR	5	SYNTHETIC	BLACK	HEAVY BLUED CARBON STEEL	21	53,3	16	39.5	100,3	5.7	2,6	2.5-6 LBS

MARK II FXP

PART #	ACTION	CALIBER	ROUND CPTY	STOCK	STOCK COLOR	BARREL	BARREL LENGTH IN / CM		TWIST RATE	OVERALL LENGTH IN / CM		WEIGHT LB / KG		ACCUTRIGGER ADJ.
26721	BOLT	22 LR	10	SYNTHETIC	OD GREEN	BLUED CARBON STEEL	21	53,3	16	39.5	100,3	6.2	2,8	2.5-6 LBS

2025

93/93R17

Squeeze more from the high-performance rimfire cartridges with our rifles from our 93/93R17 Lineup. These tack-driving, bolt-action rifles feature Savage's legendary user-adjustable AccuTrigger™ technology and come in stock and barrel options for any rimfire pursuit.

- Precision button-rifled barrels
- Carbon and stainless steel barreled actions
- User adjustable AccuTrigger™
- Detachable box magazine
- Threading 1/2x28 *(select models)*

SAVAGE®

SPECIFICATIONS SUBJECT TO CHANGE WITHOUT NOTICE.

93/93R17

2 CALIBERS // **37** MODELS

17 HMR 22 WMR

// MINIMALIST BROWN

// MINIMALIST GREEN

2025

93/93R17

MINIMALIST GREEN

PART #	ACTION	CALIBER	ROUND CPTY	STOCK	STOCK COLOR	BARREL	BARREL LENGTH IN / CM		TWIST RATE	OVERALL LENGTH IN / CM		WEIGHT LB / KG		ACCUTRIGGER ADJ.
91936	BOLT	22 WMR	10	WOOD LAMINATE	GREEN	BLUED CARBON STEEL	18	45,7	16	37.0	94,0	5.5	2,5	2.5-6 LBS
96636	BOLT	17 HMR	10	WOOD LAMINATE	GREEN	BLUED CARBON STEEL	18	45,7	9	37.0	94,0	5.5	2,5	2.5-6 LBS

MINIMALIST BROWN

PART #	ACTION	CALIBER	ROUND CPTY	STOCK	STOCK COLOR	BARREL	BARREL LENGTH IN / CM		TWIST RATE	OVERALL LENGTH IN / CM		WEIGHT LB / KG		ACCUTRIGGER ADJ.
91937	BOLT	22 WMR	10	WOOD LAMINATE	BROWN	BLUED CARBON STEEL	18	45,7	16	37.0	94,0	5.5	2,5	2.5-6 LBS
96637	BOLT	17 HMR	10	WOOD LAMINATE	BROWN	BLUED CARBON STEEL	18	45,7	9	37.0	94,0	5.5	2,5	2.5-6 LBS

93 F / 93R17 F

PART #	ACTION	CALIBER	ROUND CPTY	STOCK	STOCK COLOR	BARREL	BARREL LENGTH IN / CM		TWIST RATE	OVERALL LENGTH IN / CM		WEIGHT LB / KG		ACCUTRIGGER ADJ.
91800	BOLT	22 WMR	5	SYNTHETIC	BLACK	BLUED CARBON STEEL	21	53,3	16	39.5	100,3	5.0	2,3	2.5-6 LBS
96709	BOLT	17 HMR	5	SYNTHETIC	BLACK	BLUED CARBON STEEL	21	53,3	9	39.5	100,3	5.0	2,3	2.5-6 LBS
CAMO MODEL														
96711	BOLT	17 HMR	5	SYNTHETIC	NEXT G1	BLUED CARBON STEEL	21	53,3	9	39.5	100,3	5.0	2,3	2.5-6 LBS

SAVAGE®

SPECIFICATIONS SUBJECT TO CHANGE WITHOUT NOTICE.

93 / 93R17 FV

PART #	ACTION	CALIBER	ROUND CPTY	STOCK	STOCK COLOR	BARREL	BARREL LENGTH IN / CM		TWIST RATE	OVERALL LENGTH IN / CM		WEIGHT LB / KG		ACCUTRIGGER ADJ.
93200	BOLT	22 WMR	5	SYNTHETIC	BLACK	HEAVY BLUED CARBON STEEL	21	53,3	16	39.8	101,0	6.0	2,7	2.5-6 LBS
96700	BOLT	17 HMR	5	SYNTHETIC	BLACK	HEAVY BLUED CARBON STEEL	21	53,3	9	39.8	101,0	6.0	2,7	2.5-6 LBS

93 / 93R17 FV-SR

PART #	ACTION	CALIBER	ROUND CPTY	STOCK	STOCK COLOR	BARREL	BARREL LENGTH IN / CM		TWIST RATE	OVERALL LENGTH IN / CM		WEIGHT LB / KG		ACCUTRIGGER ADJ.
93207	BOLT	22 WMR	5	SYNTHETIC	BLACK	HEAVY BLUED CARBON STEEL	16.5	41,9	16	35.0	88,9	5.5	2,5	2.5-6 LBS
96699	BOLT	17 HMR	5	SYNTHETIC	BLACK	HEAVY BLUED CARBON STEEL	16.5	41,9	9	35.0	88,9	5.5	2,5	2.5-6 LBS

93 / 93R17 FSS

PART #	ACTION	CALIBER	ROUND CPTY	STOCK	STOCK COLOR	BARREL	BARREL LENGTH IN / CM		TWIST RATE	OVERALL LENGTH IN / CM		WEIGHT LB / KG		ACCUTRIGGER ADJ.
91700	BOLT	22 WMR	5	SYNTHETIC	BLACK	STAINLESS STEEL	21	53,3	16	39.5	100,3	5.0	2,3	2.5-6 LBS
96712	BOLT	17 HMR	5	SYNTHETIC	BLACK	STAINLESS STEEL	21	53,3	9	39.5	100,3	5.0	2,3	2.5-6 LBS

93 / 93R17 FVSS

PART #	ACTION	CALIBER	ROUND CPTY	STOCK	STOCK COLOR	BARREL	BARREL LENGTH IN / CM		TWIST RATE	OVERALL LENGTH IN / CM		WEIGHT LB / KG		ACCUTRIGGER ADJ.
94700	BOLT	22 WMR	5	SYNTHETIC	BLACK	HEAVY STAINLESS STEEL	21	53,3	16	39.5	100,3	5.5	2,5	2.5-6 LBS
96703	BOLT	17 HMR	5	SYNTHETIC	BLACK	HEAVY STAINLESS STEEL	21	53,3	9	39.5	100,3	5.5	2,5	2.5-6 LBS

93 G

PART #	ACTION	CALIBER	ROUND CPTY	STOCK	STOCK COLOR	BARREL	BARREL LENGTH IN / CM		TWIST RATE	OVERALL LENGTH IN / CM		WEIGHT LB / KG		ACCUTRIGGER ADJ.
90700	BOLT	22 WMR	5	HARDWOOD	BROWN	BLUED CARBON STEEL	21	53,3	16	39.5	100,3	5.5	2,5	2.5-6 LBS
LEFT HAND MODEL														
95700	BOLT	22 WMR	5	HARDWOOD	BROWN	BLUED CARBON STEEL	21	53,3	16	39.5	100,3	5.5	2,5	2.5-6 LBS

93R17 GV

PART #	ACTION	CALIBER	ROUND CPTY	STOCK	STOCK COLOR	BARREL	BARREL LENGTH IN / CM		TWIST RATE	OVERALL LENGTH IN / CM		WEIGHT LB / KG		ACCUTRIGGER ADJ.
96701	BOLT	17 HMR	5	HARDWOOD	BROWN	HEAVY BLUED CARBON STEEL	21	53,3	9	37.8	95,9	6.0	2,7	2.5-6 LBS
LEFT HAND MODEL														
96717	BOLT	17 HMR	5	HARDWOOD	BROWN	HEAVY BLUED CARBON STEEL	21	53,3	9	37.8	95,9	6.0	2,7	2.5-6 LBS

93R17 BVSS / 93R17 BV

PART #	ACTION	CALIBER	ROUND CPTY	STOCK	STOCK COLOR	BARREL	BARREL LENGTH IN / CM		TWIST RATE	OVERALL LENGTH IN / CM		WEIGHT LB / KG		ACCUTRIGGER ADJ.
96705	BOLT	17 HMR	5	WOOD LAMINATE	GRAY	HEAVY STAINLESS STEEL	21	53,3	9	39.8	101,0	6.8	3,1	2.5-6 LBS
96734	BOLT	17 HMR	5	WOOD LAMINATE	BROWN	HEAVY BLUED CARBON STEEL	21	53,3	9	39.8	101,0	6.8	3,1	2.5-6 LBS

93R17 BTV

PART #	ACTION	CALIBER	ROUND CPTY	STOCK	STOCK COLOR	BARREL	BARREL LENGTH IN / CM		TWIST RATE	OVERALL LENGTH IN / CM		WEIGHT LB / KG		ACCUTRIGGER ADJ.
96250	BOLT	17 HMR	5	WOOD LAMINATE	BROWN	HEAVY BLUED CARBON STEEL	21	53,3	9	40.0	101,6	7.0	3,2	2.5-6 LBS

93 / 93R17 BTVSS

PART #	ACTION	CALIBER	ROUND CPTY	STOCK	STOCK COLOR	BARREL	BARREL LENGTH IN / CM		TWIST RATE	OVERALL LENGTH IN / CM		WEIGHT LB / KG		ACCUTRIGGER ADJ.
94725	BOLT	22 WMR	5	WOOD LAMINATE	BROWN	HEAVY STAINLESS STEEL	21	53,3	16	40.0	101,6	7.3	3,3	2.5-6 LBS
96200	BOLT	17 HMR	5	WOOD LAMINATE	BROWN	HEAVY STAINLESS STEEL	21	53,3	9	40.0	101,6	7.3	3,3	2.5-6 LBS
LEFT HAND MODEL														
96210	BOLT	17 HMR	5	WOOD LAMINATE	BROWN	HEAVY STAINLESS STEEL	21	53,3	9	40.0	101,6	7.3	3,3	2.5-6 LBS

93 / 93R17 BRJ

PART #	ACTION	CALIBER	ROUND CPTY	STOCK	STOCK COLOR	BARREL	BARREL LENGTH IN / CM		TWIST RATE	OVERALL LENGTH IN / CM		WEIGHT LB / KG		ACCUTRIGGER ADJ.
92745	BOLT	22 WMR	5	WOOD LAMINATE	MULTI-COLOR	HEAVY BLUED CARBON STEEL SPIRAL FLUTED	21	53,3	16	40.0	101,6	6.3	2,9	2.5-6 LBS
96770	BOLT	17 HMR	5	WOOD LAMINATE	MULTI-COLOR	HEAVY BLUED CARBON STEEL SPIRAL FLUTED	21	53,3	9	40.0	101,6	6.3	2,9	2.5-6 LBS

93 / 93R17 BSEV

PART #	ACTION	CALIBER	ROUND CPTY	STOCK	STOCK COLOR	BARREL	BARREL LENGTH IN / CM		TWIST RATE	OVERALL LENGTH IN / CM		WEIGHT LB / KG		ACCUTRIGGER ADJ.
92750	BOLT	22 WMR	5	WOOD LAMINATE	MULTI-COLOR	HEAVY STAINLESS STEEL SPIRAL FLUTED	21	53,3	16	40.0	101,6	6.2	2,8	2.5-6 LBS
96771	BOLT	17 HMR	5	WOOD LAMINATE	MULTI-COLOR	HEAVY STAINLESS STEEL SPIRAL FLUTED	21	53,3	9	40.0	101,6	6.2	2,8	2.5-6 LBS

93R17 TR / TRR-SR

PART #	ACTION	CALIBER	ROUND CPTY	STOCK	STOCK COLOR	BARREL	BARREL LENGTH IN / CM		TWIST RATE	OVERALL LENGTH IN / CM		WEIGHT LB / KG		ACCUTRIGGER ADJ.
96782	BOLT	17 HMR	5	TACTICAL HARDWOOD	BLACK	HEAVY CARBON STEEL	22	55,9	9	40.0	101,6	7.8	3,5	2.5-6 LBS

SPECIFICATIONS SUBJECT TO CHANGE WITHOUT NOTICE.

93 FXP / 93R17 FXP

PART #	ACTION	CALIBER	ROUND CPTY	STOCK	STOCK COLOR	BARREL	BARREL LENGTH IN / CM		TWIST RATE	OVERALL LENGTH IN / CM		WEIGHT LB / KG		ACCUTRIGGER ADJ.
91806	BOLT	22 WMR	5	SYNTHETIC	BLACK	BLUED CARBON STEEL	21	53,3	16	39.5	100,3	6.2	2,8	2.5-6 LBS
96209	BOLT	17 HMR	5	SYNTHETIC	BLACK	BLUED CARBON STEEL	21	53,3	9	39.5	100,3	6.2	2,8	2.5-6 LBS

93 FVSS XP

PART #	ACTION	CALIBER	ROUND CPTY	STOCK	STOCK COLOR	BARREL	BARREL LENGTH IN / CM		TWIST RATE	OVERALL LENGTH IN / CM		WEIGHT LB / KG		ACCUTRIGGER ADJ.
95200	BOLT	22 WMR	5	SYNTHETIC	BLACK	STAINLESS STEEL	21	53,3	16	39.8	101,0	6.0	2,7	2.5-6 LBS

93R17 GVXP

PART #	ACTION	CALIBER	ROUND CPTY	STOCK	STOCK COLOR	BARREL	BARREL LENGTH IN / CM		TWIST RATE	OVERALL LENGTH IN / CM		WEIGHT LB / KG		ACCUTRIGGER ADJ.
96222	BOLT	17 HMR	5	HARDWOOD	BROWN	HEAVY BLUED CARBON STEEL	21	53,3	9	39.8	101,0	7.0	3,2	2.5-6 LBS

2025

B.MAG

Squeeze more from the high-performance 17 WSM rimfire cartridge with our B.MAG Series. These tack-driving, bolt action rifles feature Savage's legendary user-adjustable AccuTrigger™ technology and come in stock and barrel options for any rimfire pursuit.

- Designed specifically for the 17 WIN Super Magnum cartridge
- User Adjustable AccuTrigger™
- Center-feed rotary magazine
- Compact action with rear locking lugs
- Zerotolerance thread-in headspacing
- Soft rubber recoil pad

SAVAGE®

SPECIFICATIONS SUBJECT TO CHANGE WITHOUT NOTICE.

B.MAG

1 CALIBER // **6** MODELS

17 WSM

// B.MAG HEAVY BARREL

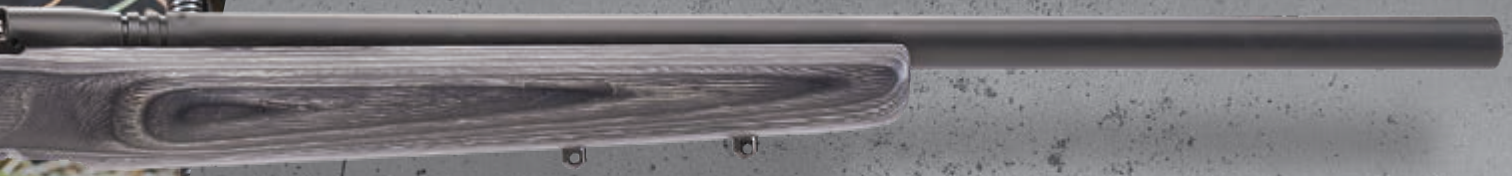

// B.MAG SPORTER

B.MAG

B.MAG

PART #	ACTION	CALIBER	ROUND CPTY	STOCK	STOCK COLOR	BARREL	BARREL LENGTH IN / CM		TWIST RATE	OVERALL LENGTH IN / CM		WEIGHT LB / KG		ACCUTRIGGER ADJ.
55901	BOLT	17 WSM	8	SYNTHETIC	BLACK	MATTE BLACK CARBON STEEL	22	55,9	8	40.5	102,9	5.0	2,2	2.5-6 LBS

B.MAG HEAVY BARREL

PART #	ACTION	CALIBER	ROUND CPTY	STOCK	STOCK COLOR	BARREL	BARREL LENGTH IN / CM		TWIST RATE	OVERALL LENGTH IN / CM		WEIGHT LB / KG		ACCUTRIGGER ADJ.
55975	BOLT	17 WSM	8	SYNTHETIC	BLACK	HEAVY MATTE BLACK CARBON STEEL	22	55,9	8	40.3	102,2	6.0	2,7	2.5-6 LBS

B.MAG STAINLESS HEAVY BARREL

PART #	ACTION	CALIBER	ROUND CPTY	STOCK	STOCK COLOR	BARREL	BARREL LENGTH IN / CM		TWIST RATE	OVERALL LENGTH IN / CM		WEIGHT LB / KG		ACCUTRIGGER ADJ.
55915	BOLT	17 WSM	8	SYNTHETIC	BLACK	HEAVY STAINLESS STEEL	22	55,9	8	40.3	102,2	6.1	2,8	2.5-6 LBS

SPECIFICATIONS SUBJECT TO CHANGE WITHOUT NOTICE.

B.MAG TARGET THUMBHOLE

PART #	ACTION	CALIBER	ROUND CPTY	STOCK	STOCK COLOR	BARREL	BARREL LENGTH IN / CM		TWIST RATE	OVERALL LENGTH IN / CM		WEIGHT LB / KG		ACCUTRIGGER ADJ.
55972	BOLT	17 WSM	8	WOOD LAMINATE	GRAY	HEAVY STAINLESS STEEL	22	55,9	8	40.3	102,2	6.1	2,8	2.5-6 LBS

B.MAG SPORTER

PART #	ACTION	CALIBER	ROUND CPTY	STOCK	STOCK COLOR	BARREL	BARREL LENGTH IN / CM		TWIST RATE	OVERALL LENGTH IN / CM		WEIGHT LB / KG		ACCUTRIGGER ADJ.
55971	BOLT	17 WSM	8	WOOD LAMINATE	GRAY	MATTE BLACK CARBON STEEL	22	55,9	8	40.3	102,2	5.9	2,7	2.5-6 LBS

B.MAG BEAVERTAIL

PART #	ACTION	CALIBER	ROUND CPTY	STOCK	STOCK COLOR	BARREL	BARREL LENGTH IN / CM		TWIST RATE	OVERALL LENGTH IN / CM		WEIGHT LB / KG		ACCUTRIGGER ADJ.
55970	BOLT	17 WSM	8	WOOD LAMINATE	GRAY	HEAVY MATTE BLACK CARBON STEEL	22	55,9	8	40.3	102,2	7.0	3,2	2.5-6 LBS

2025

SINGLE SHOT RIMFIRE

Sure, you've only got one shot, but with a Savage, it's all you need. Our Single Shot Series rimfires are perfect for new shooters all the way up to those who want to perfect the art of plinking, thanks to serious features like the adjustable AccuTrigger™, button-rifled barrels and even adjustable peep sights in select models. With a variety of colors, stock styles, and sight options, you are sure to find the right single shot rimfire rifle for you.

- User adjustable AccuTrigger™
- Carbon steel barreled action
- Precision button-rifled barrel
- Single-shot action
- Traditional two-position safety
- Cocks when bolt is opened
- Peep sights *(select models)*
- Threading 1/2x28 *(select models)*
- Drilled and tapped receiver

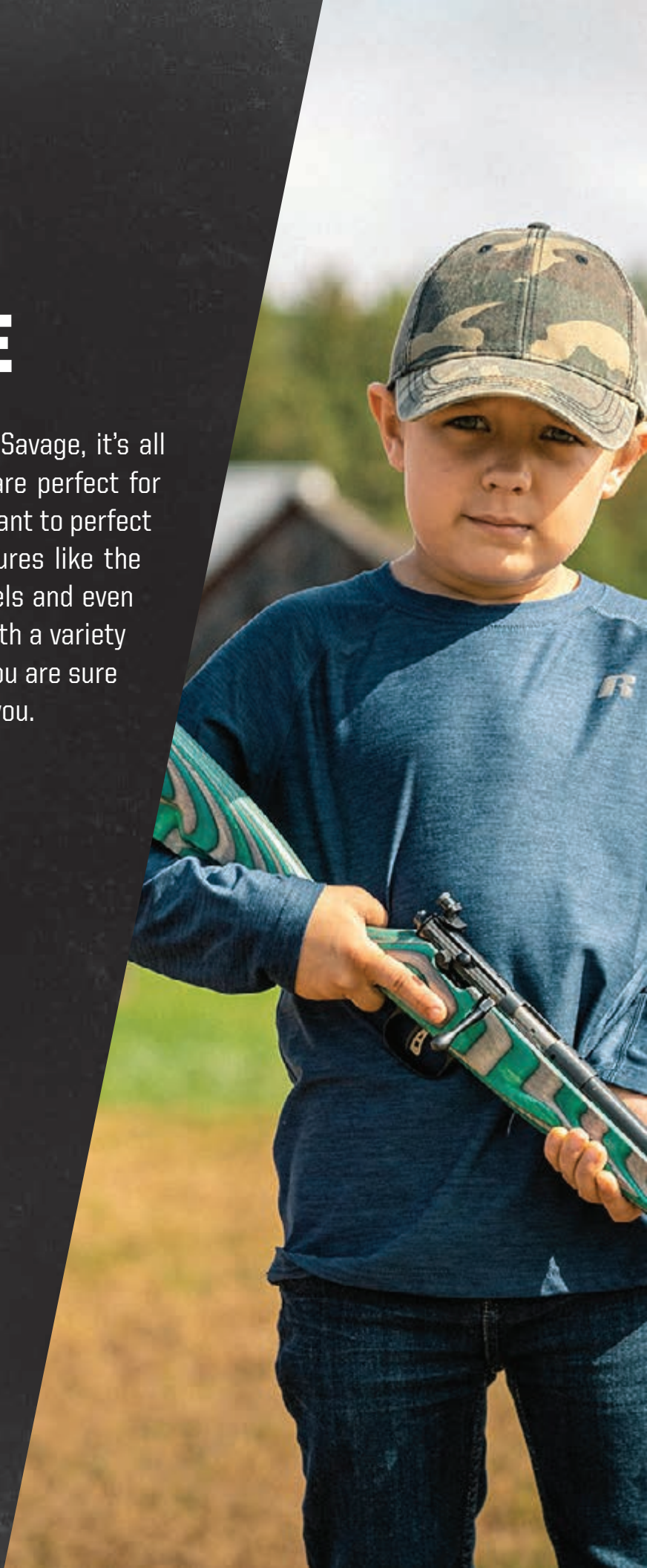

SAVAGE®

SPECIFICATIONS SUBJECT TO CHANGE WITHOUT NOTICE.

SINGLE SHOT RIMFIRE

1 CALIBER // **24** MODELS

22 LR

ACCUTRIGGER

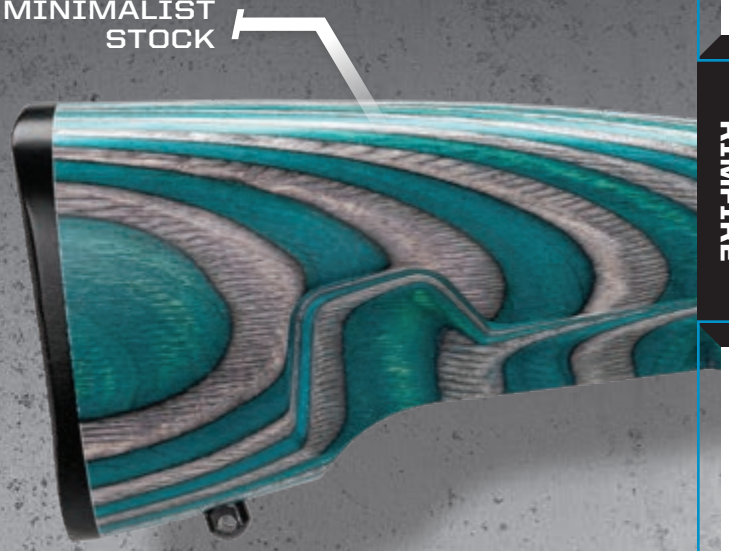

MINIMALIST STOCK

PACKAGE GUN
(select models)

2025

SINGLE SHOT RIMFIRE

MARK I FVT

PART #	ACTION	CALIBER	ROUND CPTY	STOCK	STOCK COLOR	BARREL	BARREL LENGTH IN / CM		TWIST RATE	OVERALL LENGTH IN / CM		WEIGHT LB / KG		ACCUTRIGGER ADJ.
28900	BOLT	22 LR	1	SYNTHETIC	BLACK	BLUED CARBON STEEL	21	53,3	16	39.5	100,3	6.0	2,7	2.5-6 LBS
LEFT HAND MODELS														
28901	BOLT	22 LR	1	SYNTHETIC	BLACK	BLUED CARBON STEEL	21	53,3	16	39.5	100,3	6.0	2,7	2.5-6 LBS

MARK I G

PART #	ACTION	CALIBER	ROUND CPTY	STOCK	STOCK COLOR	BARREL	BARREL LENGTH IN / CM		TWIST RATE	OVERALL LENGTH IN / CM		WEIGHT LB / KG		ACCUTRIGGER ADJ.
17000	BOLT	22 LR	1	HARDWOOD	BROWN	BLUED CARBON STEEL	21	53,3	16	39.5	100,3	5.5	2,5	2.5-6 LBS
COMPACT MODEL														
60702	BOLT	22 LR	1	HARDWOOD	BROWN	BLUED CARBON STEEL	19	48,3	16	37.0	94,0	5.0	2,3	2.5-6 LBS

RASCAL MINIMALIST

PART #	ACTION	CALIBER	ROUND CPTY	STOCK	STOCK COLOR	BARREL	BARREL LENGTH IN / CM		TWIST RATE	OVERALL LENGTH IN / CM		WEIGHT LB / KG		ACCUTRIGGER ADJ.
13797	BOLT	22 LR	1	WOOD LAMINATE	PINK/PURPLE	BLUED CARBON STEEL	16.1	41,0	16	30.6	77,8	3.5	1,6	2.5-6 LBS
13802	BOLT	22 LR	1	WOOD LAMINATE	TEAL/GRAY	BLUED CARBON STEEL	16.1	41,0	16	30.6	77,8	3.5	1,6	2.5-6 LBS

SPECIFICATIONS SUBJECT TO CHANGE WITHOUT NOTICE.

RASCAL HARDWOOD

PART #	ACTION	CALIBER	ROUND CPTY	STOCK	STOCK COLOR	BARREL	BARREL LENGTH IN / CM		TWIST RATE	OVERALL LENGTH IN / CM		WEIGHT LB / KG		ACCUTRIGGER ADJ.
13815	BOLT	22 LR	1	HARDWOOD	BROWN	BLUED CARBON STEEL	16.1	41,0	16	30.8	78,1	3.3	1,5	2.5-6 LBS
LEFT HAND MODELS														
13820	BOLT	22 LR	1	HARDWOOD	BROWN	BLUED CARBON STEEL	16.1	41,0	16	30.8	78,1	3.3	1,5	2.5-6 LBS

XP MODEL INCLUDES BIPOD AND SCOPE

RASCAL TARGET / RASCAL TARGET XP

PART #	ACTION	CALIBER	ROUND CPTY	STOCK	STOCK COLOR	BARREL	BARREL LENGTH IN / CM		TWIST RATE	OVERALL LENGTH IN / CM		WEIGHT LB / KG		ACCUTRIGGER ADJ.
13823	BOLT	22 LR	1	PRECISION HARDWOOD	BLACK	HEAVY BLUED CARBON STEEL	16.1	41,0	16	30.6	77,8	4.4	2,0	2.5-6 LBS
13824	BOLT	22 LR	1	PRECISION HARDWOOD	BLACK	HEAVY BLUED CARBON STEEL	16.1	41,0	16	30.6	77,8	6.0	2,7	2.5-6 LBS
LEFT HAND MODELS														
13836	BOLT	22 LR	1	PRECISION HARDWOOD	BLACK	HEAVY BLUED CARBON STEEL	16.1	41,0	16	30.6	77,8	6.0	2,7	2.5-6 LBS

RASCAL FV-SR

PART #	ACTION	CALIBER	ROUND CPTY	STOCK	STOCK COLOR	BARREL	BARREL LENGTH IN / CM		TWIST RATE	OVERALL LENGTH IN / CM		WEIGHT LB / KG		ACCUTRIGGER ADJ.
13834	BOLT	22 LR	1	SYNTHETIC	BLACK	HEAVY BLUED CARBON STEEL	16.1	41,0	16	30.6	77,8	3.5	1,6	2.5-6 LBS
13835	BOLT	22 LR	1	SYNTHETIC	PINK	HEAVY BLUED CARBON STEEL	16.1	41,0	16	30.6	77,8	3.5	1,6	2.5-6 LBS
LEFT HAND MODELS														
13841	BOLT	22 LR	1	SYNTHETIC	BLACK	HEAVY BLUED CARBON STEEL	16.1	41,0	16	30.6	77,8	3.5	1,6	2.5-6 LBS
13842	BOLT	22 LR	1	SYNTHETIC	PINK	HEAVY BLUED CARBON STEEL	16.1	41,0	16	30.6	77,8	3.5	1,6	2.5-6 LBS

1 ADJUSTABLE PEEP SIGHTS

2 MANUAL SAFETY

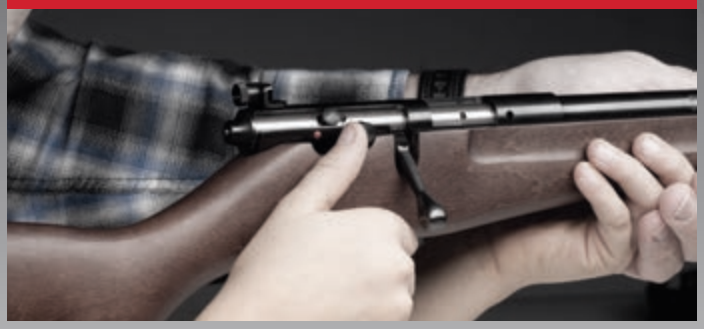

3 UNLOAD WITHOUT PULLING THE TRIGGER

4 FEED RAMP

MANUAL SAFETY // ADJUSTABLE PEEP SIGHTS // COCKS BY LIFTING BOLT // ADJUSTABLE ACCUTRIGGER™ // UNLOAD WITHOUT PULLING TRIGGER // FEED RAMP

RASCAL

PART #	ACTION	CALIBER	ROUND CPTY	STOCK	STOCK COLOR	BARREL	BARREL LENGTH IN / CM		TWIST RATE	OVERALL LENGTH IN / CM		WEIGHT LB / KG		ACCUTRIGGER ADJ.
13775	BOLT	22 LR	1	SYNTHETIC	BLACK	BLUED CARBON STEEL	16.1	41,0	16	30.6	77,8	2.7	1,2	2.5-6 LBS
13780	BOLT	22 LR	1	SYNTHETIC	PINK	BLUED CARBON STEEL	16.1	41,0	16	30.6	77,8	2.7	1,2	2.5-6 LBS
13783	BOLT	22 LR	1	SYNTHETIC	PURPLE	BLUED CARBON STEEL	16.1	41,0	16	30.6	77,8	2.7	1,2	2.5-6 LBS
13785	BOLT	22 LR	1	SYNTHETIC	BLUE	BLUED CARBON STEEL	16.1	41,0	16	30.6	77,8	2.7	1,2	2.5-6 LBS
13790	BOLT	22 LR	1	SYNTHETIC	GREEN	BLUED CARBON STEEL	16.1	41,0	16	30.6	77,8	2.7	1,2	2.5-6 LBS
13795	BOLT	22 LR	1	SYNTHETIC	RED	BLUED CARBON STEEL	16.1	41,0	16	30.6	77,8	2.7	1,2	2.5-6 LBS
13805	BOLT	22 LR	1	SYNTHETIC	YELLOW	BLUED CARBON STEEL	16.1	41,0	16	30.6	77,8	2.7	1,2	2.5-6 LBS
13810	BOLT	22 LR	1	SYNTHETIC	ORANGE	BLUED CARBON STEEL	16.1	41,0	16	30.6	77,8	2.7	1,2	2.5-6 LBS
13801	BOLT	22 LR	1	SYNTHETIC	RED, WHITE, BLUE	BLUED CARBON STEEL	16.1	41,0	16	31.5	80,0	2.7	1,2	2.5-6 LBS
LEFT HAND MODELS														
13843	BOLT	22 LR	1	SYNTHETIC	BLACK	BLUED CARBON STEEL	16.1	41,0	16	30.6	77,8	2.7	1,2	2.5-6 LBS
13844	BOLT	22 LR	1	SYNTHETIC	PINK	BLUED CARBON STEEL	16.1	41,0	16	30.6	77,8	2.7	1,2	2.5-6 LBS

SAVAGE®

SPECIFICATIONS SUBJECT TO CHANGE WITHOUT NOTICE.

puppy
love

2025

RENEGAUGE™

A SEMI-AUTO BUILT FOR RENEGADES

ADJUSTABLE LENGTH OF PULL AND COMB HEIGHT

Allow for a customized fit that enhances accuracy and comfort for each shooter.

A shim kit is included to further adjust drop and cast for minute adjustments for each shooter.

OVERSIZED CONTROLS

The charging handle and bolt release are larger than many factory shotguns for increased ease of use, particularly with gloves.

STOCK ROD BUFFER

The stock rod buffer is designed to reduce felt recoil and extend the life of the action bar assembly. *(Patent pending)*

COMPETITION-READY, EASY LOADING MAGAZINE PORT

The beveled loading port, angled trigger housing, receiver, and elevator are designed for easy and rapid loading of cartridges.

SAVAGE®

SPECIFICATIONS SUBJECT TO CHANGE WITHOUT NOTICE.

D.R.I.V. GAS SYSTEM
DUAL REGULATING INLINE VALVE GAS SYSTEM

The first semi-automatic gas operation shotgun manufactured by Savage Arms. The patented self-regulating gas system allows high power and low power loads to cycle with the same consistency and reliability. Savage's dual-valve gas system is designed to emit excess gas, thereby maintaining optimal bolt carrier velocity across various loads.

Reliable operation from 3" Magnums down to low recoil 2 ¾" cartridges.

VENTILATED RIB WITH RED FIBEROPTIC

ONE-PIECE LIGHTWEIGHT BOLT CARRIER

The action bar assembly, including the pusher sleeve, is laser welded to the carrier for increased strength and ease of assembly and disassembly.

BLACK NITRIDE

Provides excellent corrosion-resistance and surface hardness.

Full-length fluting on the barrel provides 9% weight reduction, improves balance, and swing.

2025

RENEGAUGE
SEMI-AUTO

Renegauge proves that you don't have to answer to anything but your instincts. You need gear that can withstand the harsh demands and you don't half-step into anything. Neither does Savage Arms. That's why we went all-in creating the next generation, American-Made semi-auto shotgun built to take everything your world of hunting can throw at it and perform–without fail.

- Synthetic stock
- DRIV Gas System
- Oversized controls
- Extended magazine *(select models)*
- Mossy Oak and True Timber Camo options *(select models)*
- Fluted black nitride coated barrels
- Beretta Mobil chokes
- 12 GA, 3" Chamber
- Drilled and tapped receiver

SAVAGE®

SPECIFICATIONS SUBJECT TO CHANGE WITHOUT NOTICE.

RENEGAUGE SEMI-AUTO

1 GAUGE // **7** MODELS

12GA

OVERSIZED CONTROLS

MAG TUBE EXTENSION KITS
(select models)

ADJUSTABLE LOP & COMB

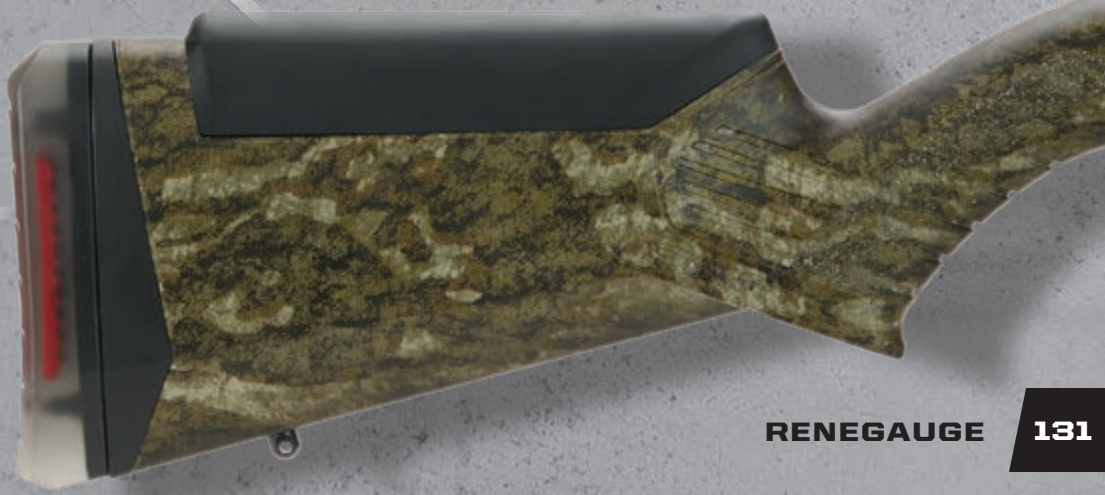

2025

RENEGAUGE SEMI-AUTO

RENEGAUGE SECURITY

PART #	ACTION	GAUGE	ROUND CPTY	STOCK	STOCK COLOR	BARREL	BARREL LENGTH IN / CM		OVERALL LENGTH IN / CM		WEIGHT LB / KG	
56207	SEMI AUTO	12 GA	6+1	SYNTHETIC	GRAY	BLACK MELONITE CARBON STEEL	18.5	47,0	40.0	101,6	7.0	3,2

RENEGAUGE PRAIRIE

PART #	ACTION	GAUGE	ROUND CPTY	STOCK	STOCK COLOR	BARREL	BARREL LENGTH IN / CM		OVERALL LENGTH IN / CM		WEIGHT LB / KG	
56205	SEMI AUTO	12 GA	4+1	SYNTHETIC	TRUE TIMBER PRAIRIE	BROWN SAND CERAKOTE	28	71,1	49.5	125,7	8.1	3,7

RENEGAUGE COMPETITION

PART #	ACTION	GAUGE	ROUND CPTY	STOCK	STOCK COLOR	BARREL	BARREL LENGTH IN / CM		OVERALL LENGTH IN / CM		WEIGHT LB / KG	
56206	SEMI AUTO	12 GA	9+1	SYNTHETIC	MATTE BLACK	BLACK MELONITE CARBON STEEL	24	61,0	46.2	117,4	8.2	3,7

SAVAGE®

SPECIFICATIONS SUBJECT TO CHANGE WITHOUT NOTICE.

RENEGAUGE FIELD

PART #	ACTION	GAUGE	ROUND CPTY	STOCK	STOCK COLOR	BARREL	BARREL LENGTH IN / CM		OVERALL LENGTH IN / CM		WEIGHT LB / KG	
56112	SEMI AUTO	12 GA	4+1	SYNTHETIC	GRAY	BLACK MELONITE CARBON STEEL	28	71,1	49.5	125,7	8.0	3,6
56113	SEMI AUTO	12 GA	4+1	SYNTHETIC	GRAY	BLACK MELONITE CARBON STEEL	26	66,0	47.5	120,7	7.9	3,6

RENEGAUGE WATERFOWL

PART #	ACTION	GAUGE	ROUND CPTY	STOCK	STOCK COLOR	BARREL	BARREL LENGTH IN / CM		OVERALL LENGTH IN / CM		WEIGHT LB / KG	
56114	SEMI AUTO	12 GA	4+1	SYNTHETIC	MOSSY OAK SHADOW GRASS BLADES	MOSSY OAK SHADOW GRASS BLADES	28	71,1	49.5	125,7	8.0	3,6
56115	SEMI AUTO	12 GA	4+1	SYNTHETIC	MOSSY OAK SHADOW GRASS BLADES	MOSSY OAK SHADOW GRASS BLADES	26	66,0	47.5	120,7	7.9	3,6

RENEGAUGE TURKEY

PART #	ACTION	GAUGE	ROUND CAPACITY	STOCK	STOCK COLOR	BARREL	BARREL LENGTH IN / CM		OVERALL LENGTH IN / CM		WEIGHT LB / KG	
56116	SEMI AUTO	12 GA	4+1	SYNTHETIC	MOSSY OAK BOTTOMLAND	MOSSY OAK BOTTOMLAND	24	61,0	45.5	115,6	7.8	3,5
56117	SEMI AUTO	12 GA	4+1	SYNTHETIC	MOSSY OAK OBSESSION	MOSSY OAK OBSESSION	24	61,0	45.5	115,6	7.8	3,5

2025

560 SEMI-AUTO

The SAVAGE line-up is adding hard-working and beautiful Turkish semi-auto shotguns. Both full-size and compact models are available. Added features like a raised ventilated rib with mid-bead and front fiberoptic sight give shooters a competitive advantage at a price that's unmatched among comparable models.

- 3" Chamber gas operated shotgun
- Turkish Walnut stock & fore-end
- Raised ventilated rib with rear sight and fiber optic front sight
- Lightweight aluminum alloy receiver
- Chrome lined barrel
- Manual safety
- Over-sized Controls
- Trigger guard safety
- Includes 3 chokes (IC, IM, F)

SAVAGE®

SPECIFICATIONS SUBJECT TO CHANGE WITHOUT NOTICE.

560 SEMI-AUTO

1 GAUGE // 2 MODELS

12GA

VENTILATED RIB

TRIGGER GUARD SAFETY

560 FIELD

PART #	ACTION	GAUGE	ROUND CPTY	STOCK	STOCK COLOR	BARREL	BARREL LENGTH IN / CM		OVERALL LENGTH IN / CM		WEIGHT LB / KG	
57963	SEMI AUTO	12 GA	4+1	TURKISH WALNUT	BROWN	BLACK CARBON STEEL	28	71,1	48.8	123,8	6.6	3,0
57964	SEMI AUTO	12 GA	4+1	TURKISH WALNUT	BROWN	BLACK CARBON STEEL	26	66,0	46.8	118,8	6.5	2,9
COMPACT MODELS												
57965	SEMI AUTO	12 GA	4+1	TURKISH WALNUT	BROWN	BLACK CARBON STEEL	26	66,0	40.8	103,5	5.6	2,5
57966	SEMI AUTO	12 GA	4+1	TURKISH WALNUT	BROWN	BLACK CARBON STEEL	24	61,0	38.8	98,4	5.4	2,4

2025

555 BREAK-ACTION

Get world-class performance in an over under shotgun at an affordable price! See our selection of everything from a 410 BORE over under, up to 12 GAUGE! Built for the field or for the sporting clays range.

- Chrome-lined barrels
- Turkish walnut stock
- Lightweight aluminum receiver with tang-mounted safety
- Single selective mechanical trigger
- Manual extractors or ejectors (Model dependent)
- Includes Full, Improved Modified, Modified, Improved Cylinder, and Cylinder choke tubes
- Receivers scaled for gauge

SAVAGE®

SPECIFICATIONS SUBJECT TO CHANGE WITHOUT NOTICE.

555 BREAK-ACTION

5 GAUGES // **7** MODELS

12 GA · 16 GA · 20 GA · 28 GA · 410 BORE

PORTED BARREL AND EXTENDED CHOKE TUBES

(555 Sporting)

BREAK-ACTION

ADJUSTABLE COMB

(Trap and Sporting Models)

WALNUT STOCK

2025

555 BREAK-ACTION

555 SPORTING

PART #	ACTION	GAUGE	ROUND CPTY	STOCK	STOCK COLOR	BARREL	BARREL LENGTH IN / CM		OVERALL LENGTH IN / CM		WEIGHT LB / KG	
18748	OVER/UNDER	12 GA	2	TURKISH WALNUT	BROWN	BLACK CARBON STEEL	30	76,2	45.8	116,3	6.8	3,1
18874	OVER/UNDER	20 GA	2	TURKISH WALNUT	BROWN	BLACK CARBON STEEL	30	76,2	48.3	122,7	6.2	2,9
18883	OVER/UNDER	410 BORE	2	TURKISH WALNUT	BROWN	BLACK CARBON STEEL	28	71,1	45.8	116,3	6.1	2,8
COMPACT MODELS												
18964	OVER/UNDER	12 GA	2	TURKISH WALNUT	BROWN	BLACK CARBON STEEL	26	66,0	42.5	108,0	5.3	2,4
18880	OVER/UNDER	20 GA	2	TURKISH WALNUT	BROWN	BLACK CARBON STEEL	26	66,0	42.3	107,4	5.2	2,4
18884	OVER/UNDER	410 BORE	2	TURKISH WALNUT	BROWN	BLACK CARBON STEEL	26	66,0	42.0	106,7	5.0	2,3

555

PART #	ACTION	GAUGE	ROUND CPTY	STOCK	STOCK COLOR	BARREL	BARREL LENGTH IN / CM		OVERALL LENGTH IN / CM		WEIGHT LB / KG	
22165	OVER/UNDER	12 GA	2	TURKISH WALNUT	BROWN	BLACK CARBON STEEL	28	71,1	45.3	115,0	6.2	2,8
22178	OVER/UNDER	16 GA	2	TURKISH WALNUT	BROWN	BLACK CARBON STEEL	28	71,1	45.3	115,0	6.2	2,8
22166	OVER/UNDER	20 GA	2	TURKISH WALNUT	BROWN	BLACK CARBON STEEL	26	66,0	43.3	110,0	5.5	2,5
22167	OVER/UNDER	28 GA	2	TURKISH WALNUT	BROWN	BLACK CARBON STEEL	26	66,0	43.3	110,0	5.5	2,5
22168	OVER/UNDER	410 BORE	2	TURKISH WALNUT	BROWN	BLACK CARBON STEEL	26	66,0	43.3	110,0	5.5	2,5
COMPACT MODELS												
22154	OVER/UNDER	20 GA	2	TURKISH WALNUT	BROWN	BLACK CARBON STEEL	24	61,0	39.6	100,5	5.0	2,3
22155	OVER/UNDER	28 GA	2	TURKISH WALNUT	BROWN	BLACK CARBON STEEL	24	61,0	39.6	100,5	5.0	2,3
22156	OVER/UNDER	410 BORE	2	TURKISH WALNUT	BROWN	BLACK CARBON STEEL	24	61,0	39.6	100,5	5.0	2,3

SPECIFICATIONS SUBJECT TO CHANGE WITHOUT NOTICE.

555 ENHANCED

PART #	ACTION	GAUGE	ROUND CPTY	STOCK	STOCK COLOR	BARREL	BARREL LENGTH IN / CM		OVERALL LENGTH IN / CM		WEIGHT LB / KG	
22592	OVER/UNDER	12 GA	2	TURKISH WALNUT	BROWN	BLACK CARBON STEEL	28	71,1	45.3	115,0	6.5	2,9
22179	OVER/UNDER	16 GA	2	TURKISH WALNUT	BROWN	BLACK CARBON STEEL	28	71,1	45.3	115,0	6.5	2,9
22593	OVER/UNDER	20 GA	2	TURKISH WALNUT	BROWN	BLACK CARBON STEEL	26	66,0	43.3	110,0	5.9	2,7
22594	OVER/UNDER	28 GA	2	TURKISH WALNUT	BROWN	BLACK CARBON STEEL	26	66,0	43.3	110,0	5.9	2,7
22595	OVER/UNDER	410 BORE	2	TURKISH WALNUT	BROWN	BLACK CARBON STEEL	26	66,0	43.3	110,0	5.6	2,5

555 TRAP

PART #	ACTION	GAUGE	ROUND CPTY	STOCK	STOCK COLOR	BARREL	BARREL LENGTH IN / CM		OVERALL LENGTH IN / CM		WEIGHT LB / KG	
23222	BREAK OPEN	12 GA	1	TURKISH WALNUT	BROWN	BLACK CARBON STEEL	30	76,2	47.5	120,7	7.5	3,4
23223	BREAK OPEN	20 GA	1	TURKISH WALNUT	BROWN	BLACK CARBON STEEL	30	76,2	47.5	120,7	7.3	3,3
COMPACT MODELS												
23224	BREAK OPEN	12 GA	1	TURKISH WALNUT	BROWN	BLACK CARBON STEEL	26	66,0	42.5	108,0	6.8	3,1
23225	BREAK OPEN	20 GA	1	TURKISH WALNUT	BROWN	BLACK CARBON STEEL	26	66,0	42.5	108,0	6.6	3,0

2025

SINGLE SHOT

Our lineup of single shot shotguns are designed for turkey hunting, target shooting, small game hunting and trap shooting in mind. Find one in 12 GAUGE, 20 GAUGE, or 410 BORE!

- Breach loading shotguns
- Optic Ready
  (select models)
- Manual safety
- Camo options
  (select models)
- Thumbhole
  (select models)
- Recoil pad
- WinChoke pattern choke tubes
- Auto ejector

SAVAGE®

SPECIFICATIONS SUBJECT TO CHANGE WITHOUT NOTICE.

SINGLE SHOT

3 GAUGES // **7** MODELS

410 BORE · 12 GA · 20 GA

2025

SINGLE SHOT

301 TURKEY XP OBSESSION

PART #	ACTION	GAUGE	ROUND CPTY	STOCK	STOCK COLOR	BARREL	BARREL LENGTH IN / CM		OVERALL LENGTH IN / CM		WEIGHT LB / KG	
23219	BREAK OPEN	410 BORE	1	SYNTHETIC	MOSSY OAK OBSESSION	BLACK CHROME ALLOY STEEL	26	66,0	41.5	105,4	5.1	2,3
23220	BREAK OPEN	20 GA	1	SYNTHETIC	MOSSY OAK OBSESSION	BLACK CHROME ALLOY STEEL	26	66,0	41.5	105,4	5.1	2,3

301 TURKEY XP BOTTOMLAND

PART #	ACTION	GAUGE	ROUND CPTY	STOCK	STOCK COLOR	BARREL	BARREL LENGTH IN / CM		OVERALL LENGTH IN / CM		WEIGHT LB / KG	
23216	BREAK OPEN	410 BORE	1	SYNTHETIC	MOSSY OAK BOTTOMLAND	BLACK CHROME ALLOY STEEL	26	66,0	41.5	105,4	5.1	2,3
23218	BREAK OPEN	20 GA	1	SYNTHETIC	MOSSY OAK BOTTOMLAND	BLACK CHROME ALLOY STEEL	26	66,0	41.5	105,4	5.1	2,3

301 TURKEY BOTTOMLAND

PART #	ACTION	GAUGE	ROUND CPTY	STOCK	STOCK COLOR	BARREL	BARREL LENGTH IN / CM		OVERALL LENGTH IN / CM		WEIGHT LB / KG	
19252	BREAK OPEN	410 BORE	1	SYNTHETIC	MOSSY OAK BOTTOMLAND	BLACK CHROME ALLOY STEEL	26	66,0	41.5	105,4	5.1	2,3
19618	BREAK OPEN	20 GA	1	SYNTHETIC	MOSSY OAK BOTTOMLAND	BLACK CHROME ALLOY STEEL	26	66,0	41.5	105,4	6.0	2,7

SPECIFICATIONS SUBJECT TO CHANGE WITHOUT NOTICE.

301 TURKEY OBSESSION

PART #	ACTION	GAUGE	ROUND CPTY	STOCK	STOCK COLOR	BARREL	BARREL LENGTH IN / CM		OVERALL LENGTH IN / CM		WEIGHT LB / KG	
19253	BREAK OPEN	410 BORE	1	SYNTHETIC	MOSSY OAK OBSESSION	BLACK CHROME ALLOY STEEL	26	66,0	41.5	105,4	5.1	2,3
57666	BREAK OPEN	12 GA	1	SYNTHETIC	MOSSY OAK OBSESSION	BLACK CHROME ALLOY STEEL	26	66,0	41.5	105,4	6.0	2,7
19619	BREAK OPEN	20 GA	1	SYNTHETIC	MOSSY OAK OBSESSION	BLACK CHROME ALLOY STEEL	26	66,0	41.5	105,4	6.0	2,7

301 SINGLE SHOT

PART #	ACTION	GAUGE	ROUND CPTY	STOCK	STOCK COLOR	BARREL	BARREL LENGTH IN / CM		OVERALL LENGTH IN / CM		WEIGHT LB / KG	
22557	BREAK OPEN	12 GA	1	SYNTHETIC	MATTE BLACK	BLACK CHROME ALLOY STEEL	26	66,0	41.0	104,1	5.9	2,7
22558	BREAK OPEN	20 GA	1	SYNTHETIC	MATTE BLACK	BLACK CHROME ALLOY STEEL	26	66,0	41.0	104,1	5.9	2,7
19201	BREAK OPEN	410 BORE	1	SYNTHETIC	MATTE BLACK	BLACK CHROME ALLOY STEEL	26	66,0	41.0	104,1	4.6	2,1
COMPACT MODELS												
22559	BREAK OPEN	20 GA	1	SYNTHETIC	MATTE BLACK	BLACK CHROME ALLOY STEEL	22	55,9	36.0	91,4	5.4	2,5
19202	BREAK OPEN	410 BORE	1	SYNTHETIC	MATTE BLACK	BLACK CHROME ALLOY STEEL	22	55,9	36.0	91,4	4.6	2,1

301 TURKEY THUMBHOLE

PART #	ACTION	GAUGE	ROUND CPTY	STOCK	STOCK COLOR	BARREL	BARREL LENGTH IN / CM		OVERALL LENGTH IN / CM		WEIGHT LB / KG	
23221	BREAK OPEN	410 BORE	1	SYNTHETIC	OLIVE DRAB	BLACK CHROME ALLOY STEEL	26	66,0	41.5	105,4	5.1	2,3

2025

PUMP ACTION

Our pump action shotguns are great for field hunters, home defense, or when you need a trap, skeet, or clay shotgun!

- Pump action
- Pistol grip *(select models)*
- Camo stock options *(select models)*
- Thumbhole options *(select models)*
- 3" Chamber
- Recoil pad
- Drilled and tapped receiver
- WinChoke pattern choke tubes *(Field models)*

SAVAGE®

SPECIFICATIONS SUBJECT TO CHANGE WITHOUT NOTICE.

PUMP ACTION

2 GAUGES // **15** MODELS

12GA 20 GA

// 320 FIELD GRADE

// 320 FIELD GRADE
MOSSY OAK SHADOW GRASS BLADE CAMO

2025

PUMP ACTION

320 TURKEY THUMBHOLE

PART #	ACTION	GAUGE	ROUND CPTY	STOCK	STOCK COLOR	BARREL	BARREL LENGTH IN / CM		OVERALL LENGTH IN / CM		WEIGHT LB / KG	
23250	PUMP	12 GA	5	SYNTHETIC	OLIVE DRAB GREEN	BLACK CHROME ALLOY STEEL	22	55,9	43.4	110,2	7.6	3,5
23251	PUMP	20 GA	5	SYNTHETIC	OLIVE DRAB GREEN	BLACK CHROME ALLOY STEEL	22	55,9	43.4	110,2	7.6	3,5

320 SECURITY THUMBHOLE BEAD SIGHT

PART #	ACTION	GAUGE	ROUND CPTY	STOCK	STOCK COLOR	BARREL	BARREL LENGTH IN / CM		OVERALL LENGTH IN / CM		WEIGHT LB / KG	
23246	PUMP	12 GA	5	SYNTHETIC	BLACK	BLACK CHROME ALLOY STEEL	19	48,3	39.1	99,3	7.2	3,3
23247	PUMP	20 GA	5	SYNTHETIC	BLACK	BLACK CHROME ALLOY STEEL	19	48,3	39.1	99,3	7.0	3,2

320 SECURITY THUMBHOLE GHOST RING SIGHT

PART #	ACTION	GAUGE	ROUND CPTY	STOCK	STOCK COLOR	BARREL	BARREL LENGTH IN / CM		OVERALL LENGTH IN / CM		WEIGHT LB / KG	
23248	PUMP	12 GA	5	SYNTHETIC	BLACK	BLACK CHROME ALLOY STEEL	19	48,3	39.1	99,3	7.3	3,3
23249	PUMP	20 GA	5	SYNTHETIC	BLACK	BLACK CHROME ALLOY STEEL	19	48,3	39.1	99,3	7.1	3,2

SPECIFICATIONS SUBJECT TO CHANGE WITHOUT NOTICE.

320 SECURITY BEAD SIGHT

PART #	ACTION	GAUGE	ROUND CPTY	STOCK	STOCK COLOR	BARREL	BARREL LENGTH IN / CM		OVERALL LENGTH IN / CM		WEIGHT LB / KG	
19486	PUMP	12 GA	5	SYNTHETIC	BLACK	BLACK CHROME ALLOY STEEL	19	48,3	39.3	99,8	6.7	3,0

320 SECURITY GHOST RING SIGHT

PART #	ACTION	GAUGE	ROUND CPTY	STOCK	STOCK COLOR	BARREL	BARREL LENGTH IN / CM		OVERALL LENGTH IN / CM		WEIGHT LB / KG	
19487	PUMP	12 GA	5	SYNTHETIC	BLACK	BLACK CHROME ALLOY STEEL	19	48,3	39.3	99,8	6.8	3,1

320 SECURITY BEAD SIGHT W/ PISTOL GRIP

PART #	ACTION	GAUGE	ROUND CPTY	STOCK	STOCK COLOR	BARREL	BARREL LENGTH IN / CM		OVERALL LENGTH IN / CM		WEIGHT LB / KG	
19485	PUMP	12 GA	5	SYNTHETIC	BLACK	BLACK CHROME ALLOY STEEL	19	47,0	39.1	99,3	6.9	3,1
22438	PUMP	20 GA	5	SYNTHETIC	BLACK	BLACK CHROME ALLOY STEEL	19	48,3	39.1	99,3	6.7	3,0

320 SECURITY GHOST RING SIGHT W/ PISTOL GRIP

PART #	ACTION	GAUGE	ROUND CPTY	STOCK	STOCK COLOR	BARREL	BARREL LENGTH IN / CM		OVERALL LENGTH IN / CM		WEIGHT LB / KG	
22439	PUMP	20 GA	5	SYNTHETIC	BLACK	BLACK CHROME ALLOY STEEL	19	48,3	39.1	99,3	6.8	3,1
19495	PUMP	12 GA	5	SYNTHETIC	BLACK	BLACK CHROME ALLOY STEEL	19	48,3	39.1	99,3	7.0	3,2

320 SECURITY BEAD SIGHT W/ PISTOL GRIP & HEAT SHIELD

PART #	ACTION	GAUGE	ROUND CPTY	STOCK	STOCK COLOR	BARREL	BARREL LENGTH IN / CM		OVERALL LENGTH IN / CM		WEIGHT LB / KG	
19496	PUMP	12 GA	5	SYNTHETIC	BLACK	BLACK CHROME ALLOY STEEL	19	48,3	39.1	99,3	7.2	3,3

320 FIELD GRADE

PART #	ACTION	GAUGE	ROUND CPTY	STOCK	STOCK COLOR	BARREL	BARREL LENGTH IN / CM		OVERALL LENGTH IN / CM		WEIGHT LB / KG	
19489	PUMP	12 GA	5	SYNTHETIC	BLACK	BLACK CHROME ALLOY STEEL	28	71,1	48.7	123,7	7.6	3,5
22436	PUMP	20 GA	5	SYNTHETIC	BLACK	BLACK CHROME ALLOY STEEL	26	66,0	46.7	118,6	7.5	3,4
COMPACT MODELS												
22437	PUMP	20 GA	5	SYNTHETIC	BLACK	BLACK CHROME ALLOY STEEL	22	55,9	41.7	105,9	7.0	3,2

320 FIELD GRADE/SECURITY COMBO

PART #	ACTION	GAUGE	ROUND CPTY	STOCK	STOCK COLOR	BARREL	BARREL LENGTH IN / CM		OVERALL LENGTH IN / CM		WEIGHT LB / KG	
19490	PUMP	12 GA	5	SYNTHETIC	BLACK	BLACK CHROME ALLOY STEEL	19	48,3	48.7	123,7	7.6	3,5

320 FIELD GRADE MOSSY OAK SHADOW GRASS BLADES CAMO

PART #	ACTION	GAUGE	ROUND CPTY	STOCK	STOCK COLOR	BARREL	BARREL LENGTH IN / CM		OVERALL LENGTH IN / CM		WEIGHT LB / KG	
22562	PUMP	12 GA	5	SYNTHETIC	MOSSY OAK SHADOW GRASS BLADES	BLACK CHROME ALLOY STEEL	28	71,1	48.7	123,7	7.6	3,5
COMPACT MODELS												
22563	PUMP	12 GA	5	SYNTHETIC	MOSSY OAK SHADOW GRASS BLADES	BLACK CHROME ALLOY STEEL	26	66,0	46.2	117,4	7.5	3,4

320 FIELD GRADE OBSESSION CAMO

PART #	ACTION	GAUGE	ROUND CPTY	STOCK	STOCK COLOR	BARREL	BARREL LENGTH IN / CM		OVERALL LENGTH IN / CM		WEIGHT LB / KG	
22564	PUMP	12 GA	5	SYNTHETIC	MOOSSY OAK OBSESSION	BLACK CHROME ALLOY STEEL	22	55,9	43.6	110,7	7.4	3,4

320 FIELD GRADE COMPACT

PART #	ACTION	GAUGE	ROUND CPTY	STOCK	STOCK COLOR	BARREL	BARREL LENGTH IN / CM		OVERALL LENGTH IN / CM		WEIGHT LB / KG	
22560	PUMP	20 GA	5	SYNTHETIC	MUDDY GIRL	BLACK CHROME ALLOY STEEL	26	66,0	46.2	117,4	7.4	3,4
22561	PUMP	20 GA	5	SYNTHETIC	MUDDY GIRL	BLACK CHROME ALLOY STEEL	22	55,9	41.7	105,9	7.0	3,2

2025

MODEL 42

Meet your must-have survival, truck, camping and more gun. The 42 Takedown rimfire-shotgun combo breaks down with simple push of one button and includes a bug-out bag so you can easily transport it anywhere. The break-action combo fires rimfire rounds from the top barrel and .410 BORE shotgun shells from the bottom.

- Rimfire-shotgun combination
- Takedown break-action
- Synthetic stock
- Matte-black metalwork
- Adjustable rifle sights
- Includes takedown storage bag

SAVAGE®

SPECIFICATIONS SUBJECT TO CHANGE WITHOUT NOTICE.

MODEL 42

2 CALIBERS // **4** MODELS

22 LR/410 BORE — 22WMR/410 BORE

TRIGGER

OPEN SIGHTS

TAKEDOWN

MODEL 42 TAKEDOWN

	PART #	ACTION	GAUGE	ROUND CPTY	STOCK	STOCK COLOR	BARREL	BARREL LENGTH IN / CM		TWIST RATE	OVERALL LENGTH IN / CM		WEIGHT LB / KG	
	55432	TAKEDOWN	22 LR / 410 BORE	2	SYNTHETIC	MATTE BLACK	BLACK SATIN CARBON STEEL	20	50,8	16	35.8	90,8	4.8	2,2
	55433	TAKEDOWN	22 WMR / 410 BORE	2	SYNTHETIC	MATTE BLACK	BLACK SATIN CARBON STEEL	20	50,8	16	35.8	90,8	4.8	2,2
NEW	23001	TAKEDOWN	22 WMR / 410 BORE	2	SYNTHETIC	OD GREEN	BLACK SATIN CARBON STEEL	20	50.8	16	35.8	90,8	4.8	2,2
NEW	23002	TAKEDOWN	22 LR / 410 BORE	2	SYNTHETIC	OD GREEN	BLACK SATIN CARBON STEEL	20	50.8	16	35.8	90,8	4.8	2,2
NEW	23003	TAKEDOWN	22 WMR / 410 BORE	2	SYNTHETIC	FDE	BLACK SATIN CARBON STEEL	20	50.8	16	35.8	90,8	4.8	2,2
NEW	23004	TAKEDOWN	22 LR / 410 BORE	2	SYNTHETIC	FDE	BLACK SATIN CARBON STEEL	20	50.8	16	35.8	90,8	4.8	2,2
COMPACT MODELS														
	55434	TAKEDOWN	22 LR / 410 BORE	2	SYNTHETIC	MATTE BLACK	BLACK SATIN CARBON STEEL	20	50,8	16	34.8	88,3	4.7	2,1

2025

NOT AVAILABLE OUTSIDE OF USA

ACCUCAN

In the world of shooting and hunting, the pursuit of perfect equipment is endless. Yet, every so often, a product comes into the market that stands a cut above the rest. Enter the Savage Arms ACCUCAN line of Suppressors.

FEATURES:

- Lightweight design – the perfect field companion
- MODULAR – Replaceable core and end cap; serialized thread mount
- Machined Gr-5 Ti, 7075-T6 Aluminum mount w/titanium thread insert
- Built in self cleaning carbon cutters
- Hardcoat anodizing finish

SCAN TO LEARN MORE

ACCUCAN SUPPRESSORS

	PART #	MODEL	CALIBER	COLOR	THREAD PITCH	WEIGHT (OZ)
	11700	AC22	.22LR, .22MAG, .17HMR	BLACK	1/2-28	3.5
	11701	AC30	.308, 6.5MM, 6.5PRC, 6.8MM, 7MM, .300 WM, 300PRC, .300 BLK	BLACK	5/8-24	10.8
	11702	AC338	.338 LAPUA MAGNUM	BLACK	5/8-24	18.5
NEW	11703	AC350	350 LEGEND, ALL CARTRIDGES 35 CALIBER AND SMALLER (EXCLUDING 338 LAPUA)	BLACK	5/8-24	10.8

64 CHASSIS KIT

Help millions of rimfire shooters upgrade their Model 64 with a new chassis.
Conversion kits sold at **savagebasecamp.com**

Kits include chassis and 20-round magazine and extended magazine release.

BIPODS

// M-LOK

// SLING STUD

FEATURES:

- Effortless one-hand control
- Rubber feet for unmatched grip in any terrain
- Lightweight premium polymer blend
- Ergonomic design for comfort and ease of use
- Adjustable with adjustable tension

SAVAGE BIPOD

PART #	MODEL
56310	M-LOK BI-POD
56311	SLING SWIVEL BI-POD

SCAN TO
LEARN MORE

MAGAZINES

PART #	COMPATIBLE MODELS	PRODUCT FAMILY	DESCRIPTION	ACTION	CALIBER	MAG CPTY	MAG COLOR	BOX UPC
56398	Model 334 Long Action	CENTERFIRE MAG BOXES	M334 IMPORT	Long	270 WIN, 30-06 SPFD	3	BLACK	011356563989
56399	Model 334 Long Action	CENTERFIRE MAG BOXES	M334 IMPORT	Long	270 WIN, 30-06 SPFD	5	BLACK	011356563996
56292	Model 334	CENTERFIRE MAG BOXES	M334 IMPORT	SHORT	243 WIN, 308 WIN, 6.5 CREEDMOOR	3 ROUND	MATTE BLUED	0-11356-56292-0
56305	Model 334	CENTERFIRE MAG BOXES	M334 IMPORT	SHORT	243 WIN, 308 WIN, 6.5 CREEDMOOR	5 ROUND	MATTE BLUED	0-11356-56305-7
56369	ALL AXIS/AXIS 2, 110 Trail Hunter, 110 Apex Hunter	CENTERFIRE MAG BOXES	Savage pattern magazine with integral release	SHORT	400 Legend	4	Black	011356563699
56370	Impulse, Polymer Bottom - Impulse Mountain Hunter, Impulse KLYM and all 2024 and newer Impulse Models	CENTERFIRE MAG BOXES	Bottom release, Polymer bottom	SHORT	308 Win, 6.5CM, 243 Win	4	Black	011356563705
56371	Impulse, Polymer Bottom - Impulse Mountain Hunter, Impulse KLYM and all 2024 and newer Impulse Models	CENTERFIRE MAG BOXES	Bottom release, Polymer bottom	Long	270 Win, 30-06	4	Black	011356563712
56372	Impulse, Polymer Bottom - Impulse Mountain Hunter, Impulse KLYM and all 2024 and newer Impulse Models	CENTERFIRE MAG BOXES	Bottom release, Polymer bottom	SHORT	6.5PRC, 300WSM	2	Black	011356563729
56373	Impulse, Polymer Bottom - Impulse Mountain Hunter, Impulse KLYM and all 2024 and newer Impulse Models	CENTERFIRE MAG BOXES	Bottom release, Polymer bottom	Long	300WM, 7mmPRC	3/2	Black	011356563736
56374	Impulse, Polymer Bottom - Impulse Mountain Hunter, Impulse KLYM and all 2024 and newer Impulse Models	CENTERFIRE MAG BOXES	Bottom release, Polymer bottom	Long	28 Nosler	2	Black	011356563743
67119	Stance XR, 10 Round	Stance XR Magazine		N/A	9mm Luger	10	Silver	0-11356-67119-6
67120	Stance XR 13 Round	Stance XR Magazine		N/A	9mm Luger	13	Silver	0-11356-67120-2
55183	10BA, 10BA STEALTH, 10 GRS, IMPULSE	CENTERFIRE MAG BOXES	BOTTOM RELEASE - AI PATTERN	SHORT	308 WIN, 6.5 CREEDMOOR	10 SHOT	MATTE BLUED	0-11356-55183-2
55191	110 BA , 110 BA STEALTH, IMPULSE	CENTERFIRE MAG BOXES	BOTTOM RELEASE - AI PATTERN	LONG	300 WIN MAG	5 SHOT	MATTE BLUED	0-11356-55191-7
55190	110 BA, 110 BA STEALTH, 110 / 111 LONG RANGE HUNTER	CENTERFIRE MAG BOXES	BOTTOM RELEASE - AI PATTERN	LONG	338 LAPUA	5 SHOT	MATTE BLUED	0-11356-55190-0
18548	IMPULSE - BIG GAME & HOG HUNTER	CENTERFIRE MAG BOXES	BOTTOM RELEASE - SAVAGE PATTERN	SHORT	22-250 REM	4 SHOT	MATTE BLUED	0-11356-18548-8
18438	IMPULSE - BIG GAME & HOG HUNTER	CENTERFIRE MAG BOXES	BOTTOM RELEASE - SAVAGE PATTERN	SHORT	243 WIN, 7MM-08 REM, 6.5 CREEDMOOR, 260 REM, 308 WIN	4 SHOT	MATTE BLUED	0-11356-18438-2
18449	IMPULSE - BIG GAME & HOG HUNTER	CENTERFIRE MAG BOXES	BOTTOM RELEASE - SAVAGE PATTERN	SHORT	270 WSM, 7MM WSM, 300 WSM	2 SHOT	MATTE BLUED	0-11356-18449-8
18137	IMPULSE - BIG GAME & HOG HUNTER	CENTERFIRE MAG BOXES	BOTTOM RELEASE - SAVAGE PATTERN	LONG	25-06 REM, 270 WIN, 30-06 SPRG	4 SHOT	MATTE BLUED	0-11356-18137-4
18299	IMPULSE - BIG GAME & HOG HUNTER	CENTERFIRE MAG BOXES	BOTTOM RELEASE - SAVAGE PATTERN	LONG	300 WIN MAG, 375 RUGER	3 SHOT	MATTE BLUED	0-11356-18299-9
55185	MODEL 10, MODEL 11, MODEL 12, MODEL 14, MODEL 110 - EXCEPT APEX, ENGAGE, HOG HUNTER, ULTRALITE & 110 LW STORM	CENTERFIRE MAG BOXES	BOTTOM RELEASE - SAVAGE PATTERN	SHORT	308 WIN, 6.5 CREEDMOOR	10 SHOT	MATTE BLUED	0-11356-55185-2
55155	10FC, 11FC, 12FCV, 12LRP, 10 PRECISION CARBINE, 10 PREDATOR HUNTER, MODEL 110 - EXCEPT APEX, ENGAGE, HOG HUNTER, ULTRALITE & 110 LW STORM	CENTERFIRE MAG BOXES	BOTTOM RELEASE - SAVAGE PATTERN	SHORT	223 REM, 204 RUGER	4 SHOT	MATTE BLUED	0-11356-55155-9
55104	10FC, 11FC, 12FCV, 12LRP, 10 PRECISION CARBINE, 10 PREDATOR HUNTER, MODEL 110 - EXCEPT APEX, ENGAGE, HOG HUNTER, ULTRALITE & 110 LW STORM	CENTERFIRE MAG BOXES	BOTTOM RELEASE - SAVAGE PATTERN	SHORT	22-250 REM	4 SHOT	MATTE BLUED	0-11356-55104-7
55105	10FC, 11FC, 12FCV, 12LRP, 10 PRECISION CARBINE, 10 PREDATOR HUNTER, MODEL 110 - EXCEPT APEX, ENGAGE, HOG HUNTER, ULTRALITE & 110 LW STORM	CENTERFIRE MAG BOXES	BOTTOM RELEASE - SAVAGE PATTERN	SHORT	243 WIN, 7MM-08 REM, 6.5 CREEDMOOR, 260 REM, 308 WIN	4 SHOT	MATTE BLUED	0-11356-55105-4
55221	10FC, 11FC, 12FCV, 12LRP, 10 PRECISION CARBINE, 10 PREDATOR HUNTER, MODEL 110 - EXCEPT APEX, ENGAGE, HOG HUNTER, ULTRALITE & 110 LW STORM	CENTERFIRE MAG BOXES	BOTTOM RELEASE - SAVAGE PATTERN	SHORT	7.62 x 39	4 SHOT	MATTE BLUED	0-11356-55221-1
55106	10FC, 11FC, 12FCV, 12LRP, 10 PRECISION CARBINE, 10 PREDATOR HUNTER, MODEL 110 - EXCEPT APEX, ENGAGE, HOG HUNTER, ULTRALITE & 110 LW STORM	CENTERFIRE MAG BOXES	BOTTOM RELEASE - SAVAGE PATTERN	SHORT	270 WSM, 7MM WSM, 300 WSM	2 SHOT	MATTE BLUED	0-11356-55106-1
55117	10FC, 11FC, 12FCV, 12LRP, 10 PREDATOR HUNTER, MODEL 110 - EXCEPT APEX , ENGAGE, HOG HUNTER, ULTRALITE & 110 LW STORM	CENTERFIRE MAG BOXES	BOTTOM RELEASE - SAVAGE PATTERN	LONG	25-06 REM, 270 WIN, 30-06 SPRG, 280 ACKLEY IMPROVED	4 SHOT	MATTE BLUED	0-11356-55117-7
55118	10FC, 11FC, 12FCV, 12LRP, 10 PREDATOR HUNTER, MODEL 110 - EXCEPT APEX , ENGAGE, HOG HUNTER, ULTRALITE & 110 LW STORM	CENTERFIRE MAG BOXES	BOTTOM RELEASE - SAVAGE PATTERN	LONG	300 WIN MAG, 375 RUGER, 28 NOSLER	3 SHOT	MATTE BLUED	0-11356-55118-4
55224	110 ENGAGE HUNTER XP, 110 APEX XP, 110 HOG HUNTER, MODEL 110	CENTERFIRE MAG BOXES	BOTTOM RELEASE - SAVAGE PATTERN	LONG	450 BUSHMASTER	3 SHOT	MATTE BLUED	0-11356-55224-2
55260	110FC, 111FC, MODEL 110 - EXCEPT APEX , ENGAGE, HOG HUNTER, ULTRALITE & 110 LW STORM	CENTERFIRE MAG BOXES	BOTTOM RELEASE - SAVAGE PATTERN	LONG	6.5 x 284 NORMA	3 SHOT	MATTE BLUED	0-11356-55260-0
55119	110FC, 111FC, MODEL 110 - EXCEPT APEX , ENGAGE, HOG HUNTER, ULTRALITE & 110 LW STORM	CENTERFIRE MAG BOXES	BOTTOM RELEASE - SAVAGE PATTERN	LONG	7MM REM MAG, 338 WIN MAG	3 SHOT	MATTE BLUED	0-11356-55119-1
55156	12, 14, 16C, MODEL 110 - EXCEPT APEX , ENGAGE, HOG HUNTER, ULTRALITE & 110 LW STORM	CENTERFIRE MAG BOXES	BOTTOM RELEASE - SAVAGE PATTERN	SHORT	223 REM, 204 RUGER	4 SHOT	STAINLESS	0-11356-55156-6
55108	12, 14, 16C, MODEL 110 - EXCEPT APEX , ENGAGE, HOG HUNTER, ULTRALITE & 110 LW STORM	CENTERFIRE MAG BOXES	BOTTOM RELEASE - SAVAGE PATTERN	SHORT	22-250 REM	4 SHOT	STAINLESS	0-11356-55108-5
55109	12, 14, 16C, MODEL 110 - EXCEPT APEX , ENGAGE, HOG HUNTER, ULTRALITE & 110 LW STORM	CENTERFIRE MAG BOXES	BOTTOM RELEASE - SAVAGE PATTERN	SHORT	243 WIN, 7MM-08 REM, 6.5 CREEDMOOR, 260 REM, 308 WIN, 338 FEDERAL	4 SHOT	STAINLESS	0-11356-55109-2
55110	12, 14, 16C, MODEL 110 - EXCEPT APEX , ENGAGE, HOG HUNTER, ULTRALITE & 110 LW STORM	CENTERFIRE MAG BOXES	BOTTOM RELEASE - SAVAGE PATTERN	SHORT	270 WSM, 7MM WSM, 300 WSM, 325 WSM	2 SHOT	STAINLESS	0-11356-55110-8
55123	114, 116C, MODEL 110 - EXCEPT APEX , ENGAGE, HOG HUNTER, ULTRALITE & 110 LW STORM	CENTERFIRE MAG BOXES	BOTTOM RELEASE - SAVAGE PATTERN	LONG	25-06 REM, 270 WIN, 30-06 SPRG, 280 ACKLEY IMPROVED	4 SHOT	STAINLESS	0-11356-55123-8
55124	114, 116C, MODEL 110 - EXCEPT APEX , ENGAGE, HOG HUNTER, ULTRALITE & 110 LW STORM	CENTERFIRE MAG BOXES	BOTTOM RELEASE - SAVAGE PATTERN	LONG	300 WIN MAG, 375 RUGER, 28 NOSLER	3 SHOT	STAINLESS	0-11356-55124-5
55261	114, 116C, MODEL 110 - EXCEPT APEX , ENGAGE, HOG HUNTER, ULTRALITE & 110 LW STORM	CENTERFIRE MAG BOXES	BOTTOM RELEASE - SAVAGE PATTERN	LONG	6.5 x 284 NORMA	3 SHOT	STAINLESS	0-11356-55261-7

PART #	COMPATIBLE MODELS	PRODUCT FAMILY	DESCRIPTION	ACTION	CALIBER	MAG CPTY	MAG COLOR	BOX UPC
55125	114, 116C, MODEL 110 - EXCEPT APEX , ENGAGE, HOG HUNTER, ULTRALITE & 110 LW STORM	CENTERFIRE MAG BOXES	BOTTOM RELEASE - SAVAGE PATTERN	LONG	7MM REM MAG, 338 WIN MAG	3 SHOT	STAINLESS	0-11356-55125-2
55250	25, 25 CAMO	CENTERFIRE MAG BOXES	BOTTOM RELEASE - SAVAGE PATTERN	N/A	17 HORNET	4 SHOT	BLACK	0-11356-55250-1
55222	25, 25 CAMO	CENTERFIRE MAG BOXES	BOTTOM RELEASE - SAVAGE PATTERN	N/A	22 HORNET	4 SHOT	BLACK	0-11356-55222-8
55158	25, 25 CAMO	CENTERFIRE MAG BOXES	BOTTOM RELEASE - SAVAGE PATTERN	N/A	222 REM, 223 REM, 204 RUGER	4 SHOT	BLACK	0-11356-55158-0
55220	212 SLUG GUN	CENTERFIRE MAG BOXES	BOTTOM RELEASE - SAVAGE PATTERN	N/A	12 GAUGE	2 SHOT	BLACK	0-11356-55220-4
55159	220 SLUG GUN	CENTERFIRE MAG BOXES	BOTTOM RELEASE - SAVAGE PATTERN	N/A	20 GAUGE	2 SHOT	BLACK	0-01135-55159-7
55230	ALL AXIS/AXIS 2 - NOT AXIS 2 PRECISION, 11 LIGHT WEIGHT HUNTER, 10 TROPHY HUNTER XP, 11 TROPHY HUNTER XP, 16 TROPHY HUNTER XP, 11 LADY HUNTER, 11 HUNTER XP, 11 DOA HUNTER XP, 110 ENGAGE HUNTER XP, 110 APEX HUNTER XP, 110 HOG HUNTER, 300 BLACKOUT	CENTERFIRE MAG BOXES	SAVAGE PATTERN MAGAZINE WITH INTEGRAL RELEASE	SHORT	223 REM, 204 RUGER, 300 BLK	4 SHOT	MATTE BLUED	0-11356-55230-3
55236	ALL AXIS/AXIS 2 - NOT AXIS 2 PRECISION, 110 ENGAGE HUNTER XP, 110 APEX HUNTER XP, 110 HOG HUNTER	CENTERFIRE MAG BOXES	SAVAGE PATTERN MAGAZINE WITH INTEGRAL RELEASE	SHORT	350 LEGEND	4 SHOT	MATTE BLUED	0-11356-55236-5
55231	ALL AXIS/AXIS 2 - NOT AXIS 2 PRECISION, 11 LIGHT WEIGHT HUNTER, 10 TROPHY HUNTER XP, 11 TROPHY HUNTER XP, 16 TROPHY HUNTER XP, 11 LADY HUNTER, 11 HUNTER XP, 11 DOA HUNTER XP, 110 ENGAGE HUNTER XP, 110 APEX HUNTER XP	CENTERFIRE MAG BOXES	SAVAGE PATTERN MAGAZINE WITH INTEGRAL RELEASE	SHORT	22-250 REM	4 SHOT	MATTE BLUED	0-11356-55231-0
55232	ALL AXIS/AXIS 2 - NOT AXIS 2 PRECISION, 11 LIGHT WEIGHT HUNTER, 10 TROPHY HUNTER XP, 11 TROPHY HUNTER XP, 16 TROPHY HUNTER XP, 11 LADY HUNTER, 11 HUNTER XP, 11 DOA HUNTER XP, 110 ENGAGE HUNTER XP, 110 APEX HUNTER XP, 110 HOG HUNTER, 110 ULTRALITE	CENTERFIRE MAG BOXES	SAVAGE PATTERN MAGAZINE WITH INTEGRAL RELEASE	SHORT	243 WIN, 7MM-08 REM, 6.5 CREEDMOOR, 260 REM, 308 WIN, 338 FEDERAL	4 SHOT	MATTE BLUED	0-11356-55232-7
55252	ALL AXIS/AXIS 2 - NOT AXIS 2 PRECISION, 11 LIGHT WEIGHT HUNTER, 10 TROPHY HUNTER XP, 11 TROPHY HUNTER XP, 16 TROPHY HUNTER XP, 11 LADY HUNTER, 11 HUNTER XP, 11 DOA HUNTER XP, 110 ENGAGE HUNTER XP, 110 APEX HUNTER XP, 110 ULTRALITE	CENTERFIRE MAG BOXES	SAVAGE PATTERN MAGAZINE WITH INTEGRAL RELEASE	SHORT	270 WSM, 300 WSM, 6.5 PRC	2 SHOT	MATTE BLUED	0-11356-55252-5
55275	ALL AXIS/AXIS 2 - NOT AXIS 2 PRECISION, 11 LIGHT WEIGHT HUNTER, 10 TROPHY HUNTER XP, 11 TROPHY HUNTER XP, 16 TROPHY HUNTER XP, 11 LADY HUNTER, 11 HUNTER XP, 11 DOA HUNTER XP, 110 ENGAGE HUNTER XP, 110 APEX HUNTER XP, 110 HOG HUNTER	CENTERFIRE MAG BOXES	SAVAGE PATTERN MAGAZINE WITH INTEGRAL RELEASE	SHORT	6MM ARC	4 SHOT	MATTE BLUED	0-11356-55275-4
55233	ALL AXIS/AXIS 2 - NOT AXIS 2 PRECISION, 111 LIGHT WEIGHT HUNTER, 110 TROPHY HUNTER XP, 111 TROPHY HUNTER XP, 116 TROPHY HUNTER XP, 111 LADY HUNTER, 111 HUNTER XP, 111 DOA HUNTER XP, 110 ENGAGE HUNTER XP, 110 APEX HUNTER XP, 110 ULTRALITE	CENTERFIRE MAG BOXES	SAVAGE PATTERN MAGAZINE WITH INTEGRAL RELEASE	LONG	25-06 REM, 270 WIN, 30-06 SPRG, 280 ACKLEY	4 SHOT	MATTE BLUED	0-11356-55233-4
55234	ALL AXIS/AXIS 2 - NOT AXIS 2 PRECISION, 111 LIGHT WEIGHT HUNTER, 110 TROPHY HUNTER XP, 111 TROPHY HUNTER XP, 116 TROPHY HUNTER XP, 111 LADY HUNTER, 111 HUNTER XP, 111 DOA HUNTER XP, 110 ENGAGE HUNTER XP, 110 APEX HUNTER XP	CENTERFIRE MAG BOXES	SAVAGE PATTERN MAGAZINE WITH INTEGRAL RELEASE	LONG	6.5 x 284 NORMA	3 SHOT	MATTE BLUED	0-11356-55234-1
55253	ALL AXIS/AXIS 2 - NOT AXIS 2 PRECISION, 111 LIGHT WEIGHT HUNTER, 110 TROPHY HUNTER XP, 111 TROPHY HUNTER XP, 116 TROPHY HUNTER XP, 111 LADY HUNTER, 111 HUNTER XP, 111 DOA HUNTER XP, 110 ENGAGE HUNTER XP, 110 APEX HUNTER XP, 110 ULTRALITE	CENTERFIRE MAG BOXES	SAVAGE PATTERN MAGAZINE WITH INTEGRAL RELEASE	LONG	7MM REM MAG, 338 WIN MAG	3 SHOT	MATTE BLUED	0-11356-55253-2
55254	ALL AXIS/AXIS 2 - NOT AXIS 2 PRECISION, 111 LIGHT WEIGHT HUNTER, 110 TROPHY HUNTER XP, 111 TROPHY HUNTER XP, 116 TROPHY HUNTER XP, 111 LADY HUNTER, 111 HUNTER XP, 111 DOA HUNTER XP, 110 ENGAGE HUNTER XP, 110 APEX HUNTER XP, 110 ULTRALITE	CENTERFIRE MAG BOXES	SAVAGE PATTERN MAGAZINE WITH INTEGRAL RELEASE	LONG	375 RUGER, 300 WIN MAG, 28 NOSLER	3 SHOT	MATTE BLUED	0-11356-55254-9
90010	93 / 93R17 SERIES - MAGNUM	RIMFIRE MAG BOXES	DETATCHABLE BOX MAGAZINE	N/A	22 WMR, 17 HMR	10 SHOT	BLACK	0-62654-90010-5
90019	93 / 93R17 SERIES - MAGNUM	RIMFIRE MAG BOXES	DETATCHABLE BOX MAGAZINE	N/A	22 WMR, 17 HMR	10 SHOT	SILVER	0-62654-90019-8
90001	93 / 93R17 SERIES - MAGNUM	RIMFIRE MAG BOXES	DETATCHABLE BOX MAGAZINE	N/A	22 MAGNUM	5 SHOT	BLACK	0-62654-90001-3
90009	93 / 93R17 SERIES - MAGNUM	RIMFIRE MAG BOXES	DETATCHABLE BOX MAGAZINE	N/A	22 MAGNUM, 17 HMR	5 SHOT	SILVER	0-62654-90009-9
30005	64 SERIES	RIMFIRE MAG BOXES	DETATCHABLE BOX MAGAZINE	N/A	22 LR, 21 SHARP	10 SHOT	BLACK	0-62654-30005-9
30020	64 SERIES	RIMFIRE MAG BOXES	DETATCHABLE BOX MAGAZINE	N/A	22 LR, 21 SHARP	20 SHOT	BLACK	0-62654-30020-2
20005	MK II SERIES	RIMFIRE MAG BOXES	DETATCHABLE BOX MAGAZINE	N/A	22 LR, 17 MACH2, 21 SHARP	10 SHOT	BLACK	0-62654-20005-2
90008	MK II SERIES	RIMFIRE MAG BOXES	DETATCHABLE BOX MAGAZINE	N/A	22 LR, 17 MACH2, 21 SHARP	10 SHOT	SILVER	0-62654-90008-2
90005	MK II SERIES	RIMFIRE MAG BOXES	DETATCHABLE BOX MAGAZINE	N/A	22 LR, 17 MACH2, 21 SHARP	5 SHOT	BLACK	0-62654-90005-1
90007	MK II SERIES	RIMFIRE MAG BOXES	DETATCHABLE BOX MAGAZINE	N/A	22 LR, 17 MACH2, 21 SHARP	5 SHOT	SILVER	0-62654-90007-5
90020	BMAG SERIES	RIMFIRE MAG BOXES	DETATCHABLE BOX MAGAZINE	N/A	17 WSM	8 SHOT	BLACK	0-11356-90020-3
90022	A17 - B17 SERIES	RIMFIRE MAG BOXES	ROTARY MAGAZINES	N/A	17 HMR	10 SHOT	BLACK	0-11356-90022-7
90023	A22 - B22 SERIES	RIMFIRE MAG BOXES	ROTARY MAGAZINES	N/A	22 LR, 21 SHARP	10 SHOT	BLACK	0-62654-90023-5
47205	A22 - B22 SERIES	RIMFIRE MAG BOXES	ROTARY MAGAZINES	N/A	22 WMR	10 SHOT	BLACK	0-11356-47205-2
55258	A17 Mach 2	RIMFIRE MAG BOXES	ROTARY MAGAZINES	N/A	17 HM2	10 SHOT	BLACK	0-11356-55258-7
67100	STANCE	HANDGUNS	STANCE MAGAZINE	N/A	9x19MM	7-RDS	SILVER	0-11356-67100-4
67102	STANCE	HANDGUNS	STANCE MAGAZINE	N/A	9x19MM	10-RDS	SILVER	0-11356-67102-8
67104	STANCE	HANDGUNS	STANCE MAGAZINE	N/A	9x19MM	8-RDS	SILVER	0-11356-67104-2
23256	RENEGAUGE	SHOTGUNS	EXTENDED MAG TUBE ASSEMBLY KIT - INCLUDES: EXTENDED MAGAZINE TUBE - SPRING - MAG CAP - BARREL CLAMP	N/A	N/A	9+1	MATTE BLACK	0-11356-23256-4
70459	RASCALS	SHOTGUNS	RASCAL SCOPE MOUNT BASE (INCLUDES: 4 SCREWS)	N/A	N/A	N/A	BLACK	0-62654-70459-8

PART #	COMPATIBLE MODELS	PRODUCT FAMILY	DESCRIPTION	ACTION	LATCH	MAG COLOR	BOX UPC
56306	ALL AXIS, AXIS 2, 110 APEX & 110 ULTRALITE	ACCESSORIES	SINGLE SHOT ADAPTER	SHORT	INTEGRAL	BLACK	0-11356-56306-4
56307	ALL 110 MODELS w/ LATCH ON RIFLE	ACCESSORIES	SINGLE SHOT ADAPTER	SHORT	NONE	BLACK	0-11356-56307-1
56308	ALL AXIS, AXIS 2, 110 APEX & 110 ULTRALITE	ACCESSORIES	SINGLE SHOT ADAPTER	LONG	INTEGRAL	BLACK	0-11356-56308-8
56309	ALL 110 MODELS w/ LATCH ON RIFLE	ACCESSORIES	SINGLE SHOT ADAPTER	LONG	NONE	BLACK	0-11356-56309-5

©2024 SAVAGE ARMS, INC.